LINK®

MEGASYSTEM-C®

Tumor and Revision Surgery

Implants & Instruments

Presented by:

CE 0123

Waldemar Link GmbH & Co. KG

Barkhausenweg 10 · 22339 Hamburg, Germany
P.O. Box 63 05 52 · 22315 Hamburg, Germany
Tel.: +49 40 53995-0 · Fax: +49 40 5386929
E-mail: info@linkhh.de · www.linkorthopaedics.com

MEGASYSTEM-C®
Tumor and Revision Surgery

Indications / Contraindications

Please note:

Specified indications / contraindications see catalog:

MEGASYSTEM-C® Tumor and Revision Surgery - Surgical Technique.

System Description

The design of the modular Bone and Joint Revision System **MEGASYSTEM-C®** for tumor and revision surgery has been developed in collaboration with Prof. Dr. Capanna of the Centro Traumatologico Ortopedico in Florence.

Due to its high modularity, the system allows partial bone replacements both in the proximal and distal femur in small increments as well as a total replacement of the femur. For the knee joint components, the **Endo-Model® SL®** Rotational Knee is used in the **MEGASYSTEM-C®**.

The modularity of the system helps to successfully address intraoperative problems. Observation of biomechanical load and anchoring principles and the application of proven implant components successfully tested over a long period allow utmost safety of the system and thus good prospects for the surgical outcome.

- Maximum intraoperative flexibility using highly modular implant components, thus reducing costs for true custom-made implants
- System-integrated components compatible with standard implant systems such as the MP® Reconstruction Hip System and Endo-Model® Total Knee Joint Prosthesis System
- Knee joint components based on long-term clinical experience with the Endo-Model® Rotational Knee Prosthesis
- Coupling mechanics clinically tested over a long period
- Cemented and cementless stem components
- Length adjustment in 10 mm increments intraoperatively
- Microporous implant surfaces support bone ongrowth
- Easy to handle system-integrated instrumentation

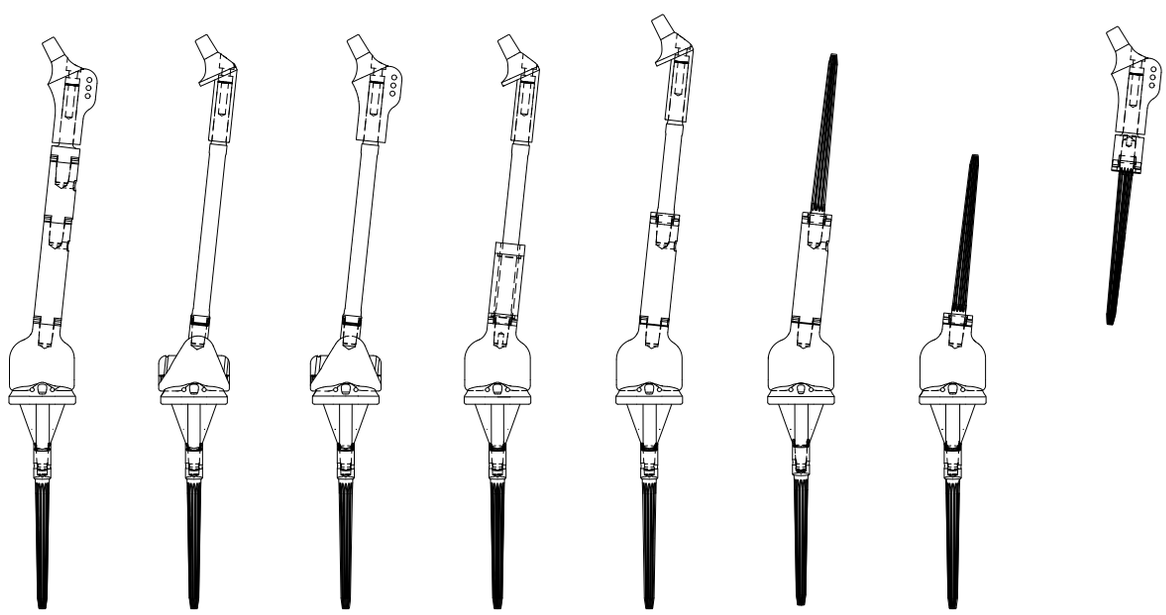


MEGASYSTEM-C®
Endo-Model® SL®
Rotational and Hinged
Knee System

Varity of Assembly 1

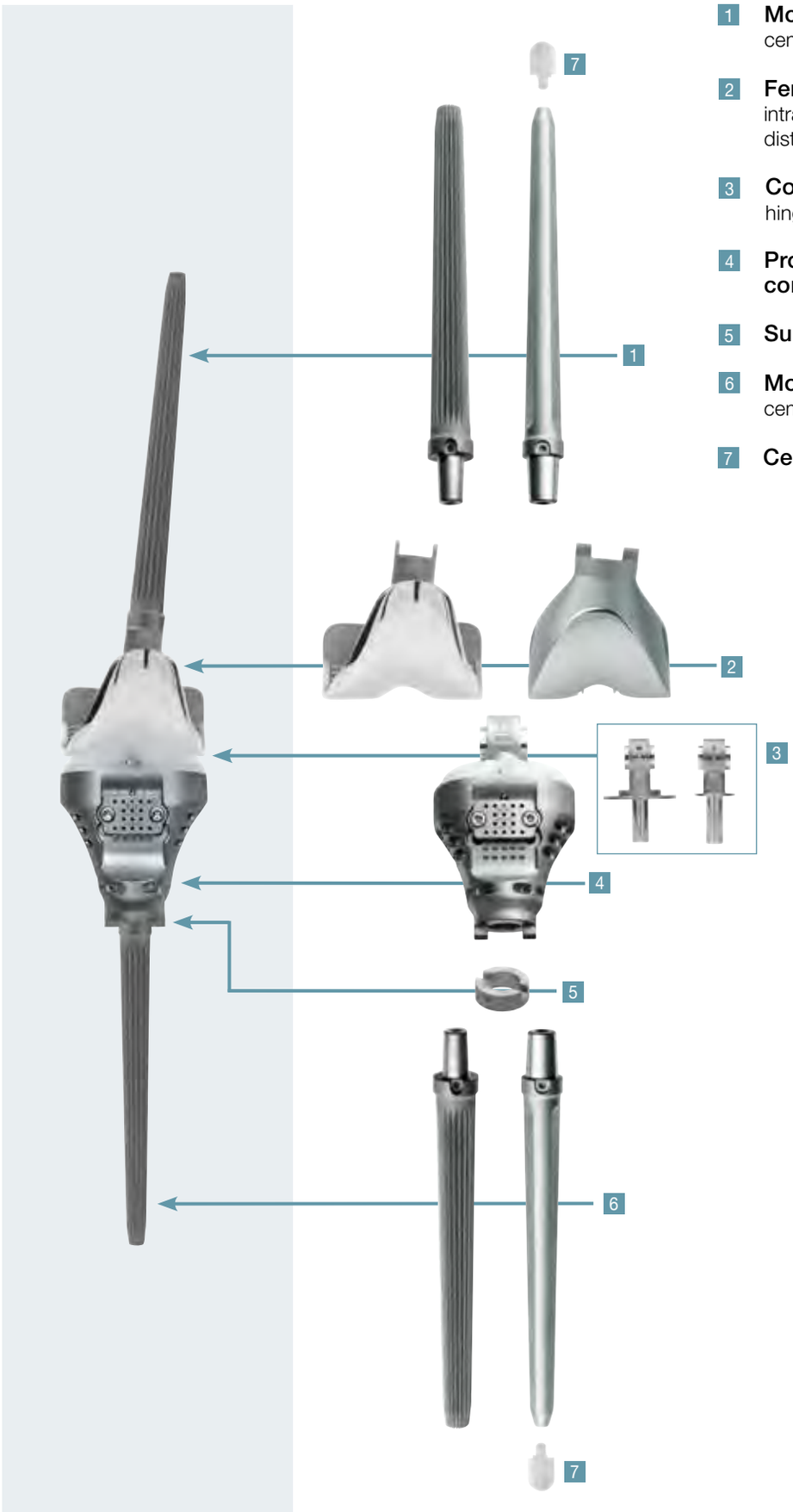

1 **Modular stems**
cementless + cemented

2 **Femoral components:**
intracondylar with patella flange and distal femoral replacement

3 **Connection components:**
hinged or rotational version

4 **Proximal tibia replacement component,** modular

5 **Support ring**

6 **Modular stems**
cementless + cemented

7 **Centralizers**

Varity of Assembly 2

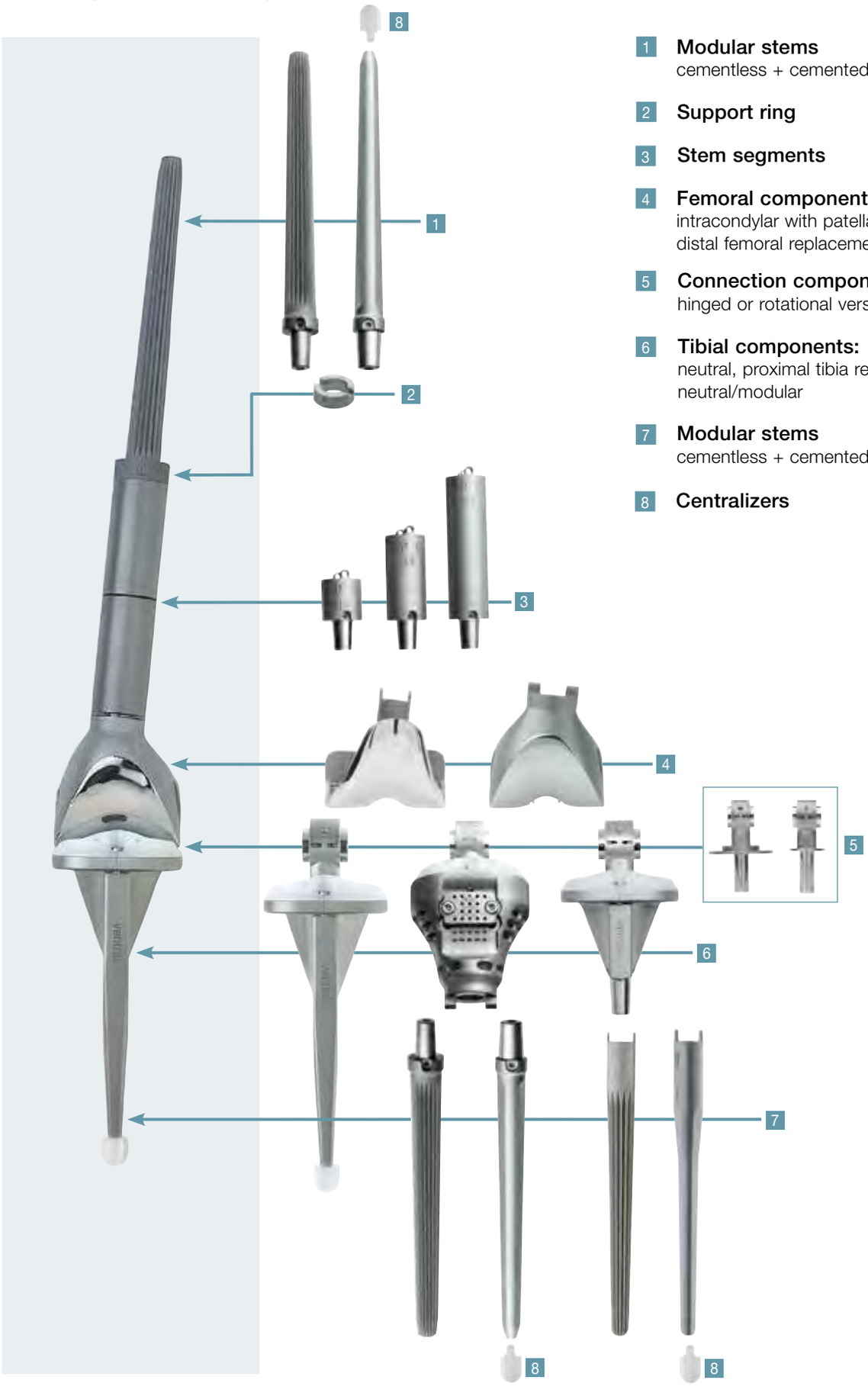

1 **Modular stems**
cementless + cemented

2 **Support ring**

3 **Stem segments**

4 **Femoral components:**
intracondylar with patella flange and distal femoral replacement

5 **Connection components:**
hinged or rotational version

6 **Tibial components:**
neutral, proximal tibia replacement, neutral/modular

7 **Modular stems**
cementless + cemented

8 **Centralizers**

Varity of Assembly 3

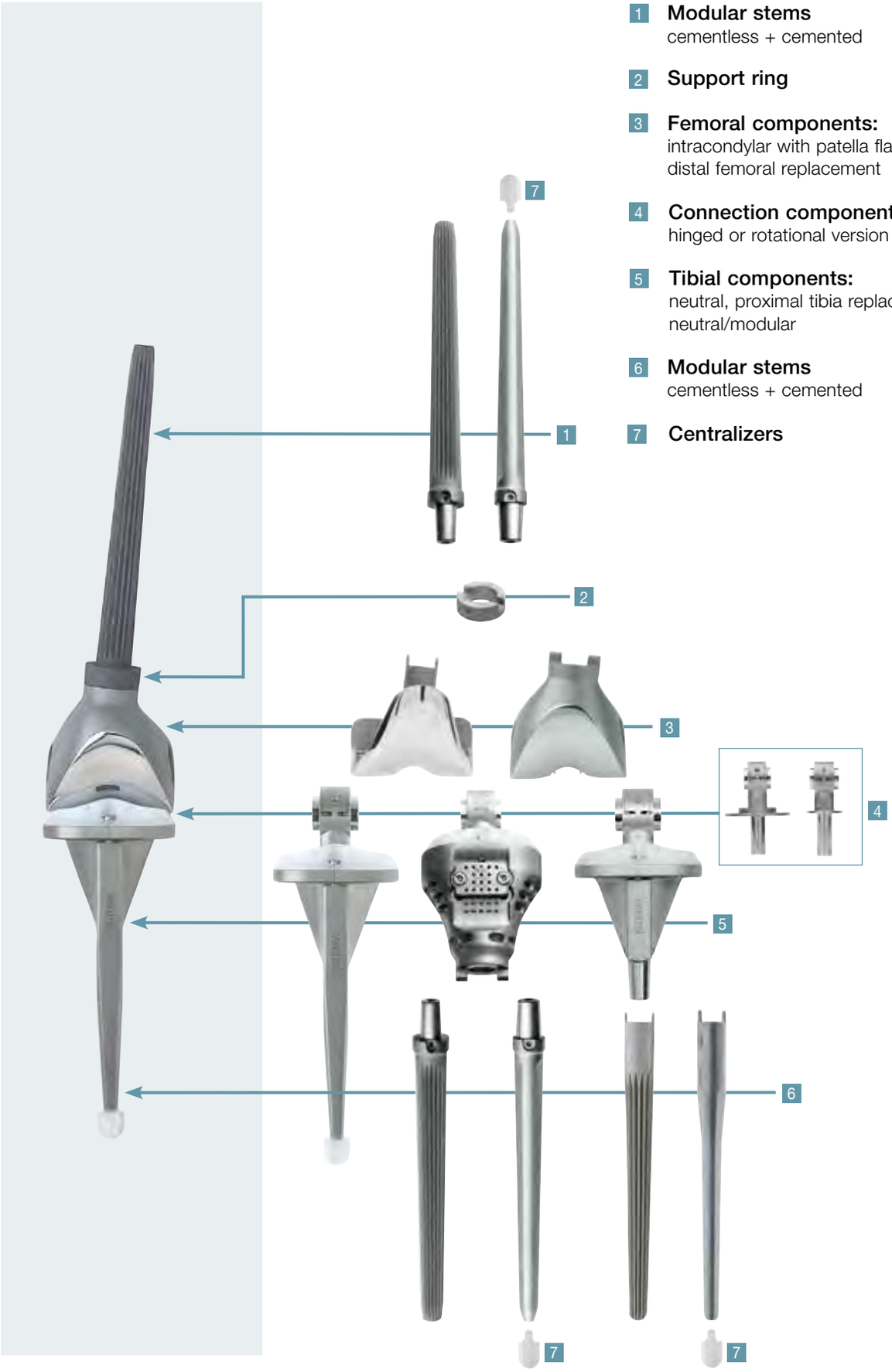

1 **Modular stems**
cementless + cemented

2 **Support ring**

3 **Femoral components:**
intracondylar with patella flange and distal femoral replacement

4 **Connection components:**
hinged or rotational version

5 **Tibial components:**
neutral, proximal tibia replacement, neutral/modular

6 **Modular stems**
cementless + cemented

7 **Centralizers**

Varity of Assembly 4

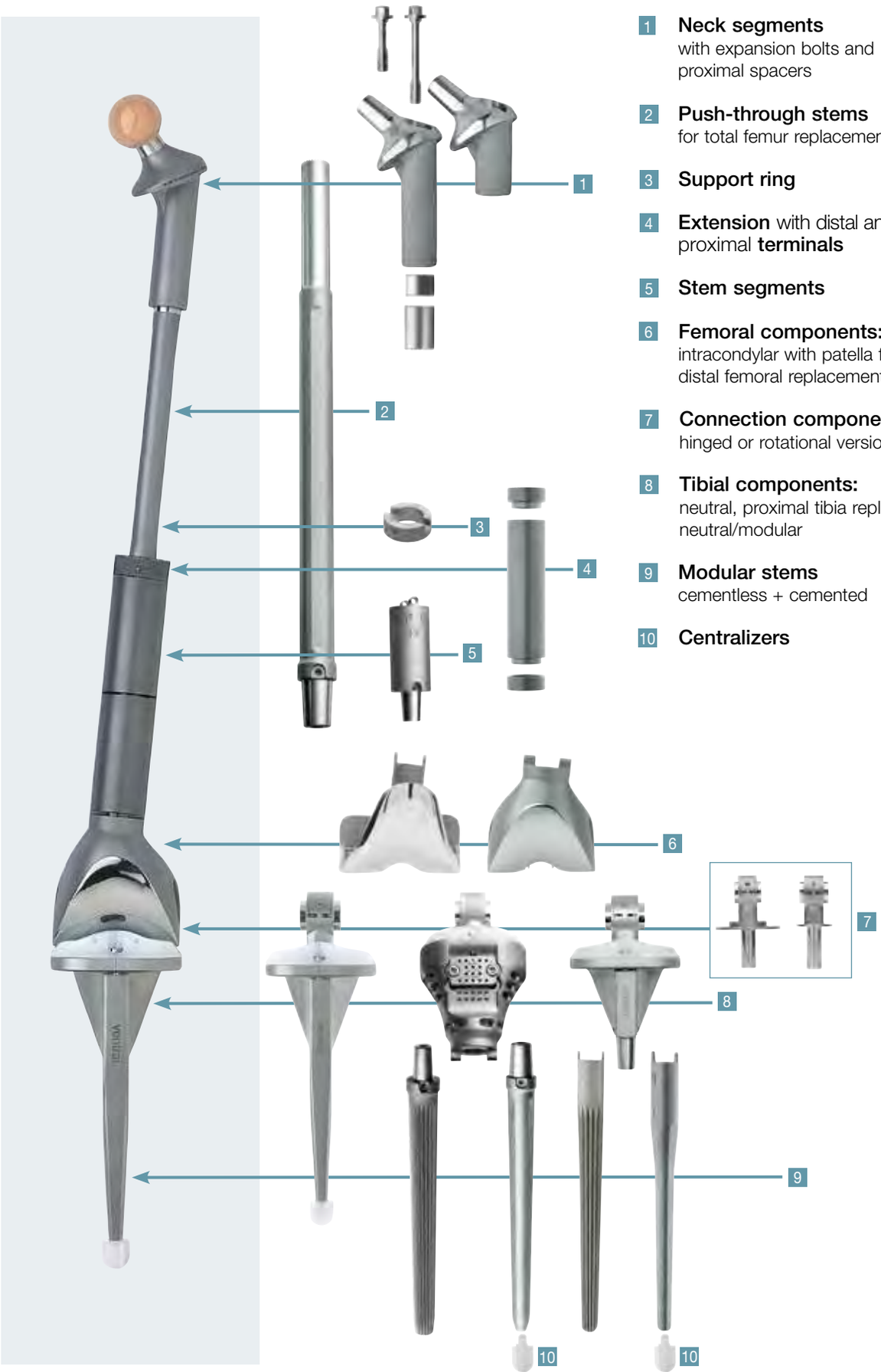

1 **Neck segments**
with expansion bolts and proximal spacers

2 **Push-through stems**
for total femur replacement

3 **Support ring**

4 **Extension** with distal and proximal **terminals**

5 **Stem segments**

6 **Femoral components:**
intracondylar with patella flange and distal femoral replacement

7 **Connection components:**
hinged or rotational version

8 **Tibial components:**
neutral, proximal tibia replacement, neutral/modular

9 **Modular stems**
cementless + cemented

10 **Centralizers**

Varity of Assembly 5

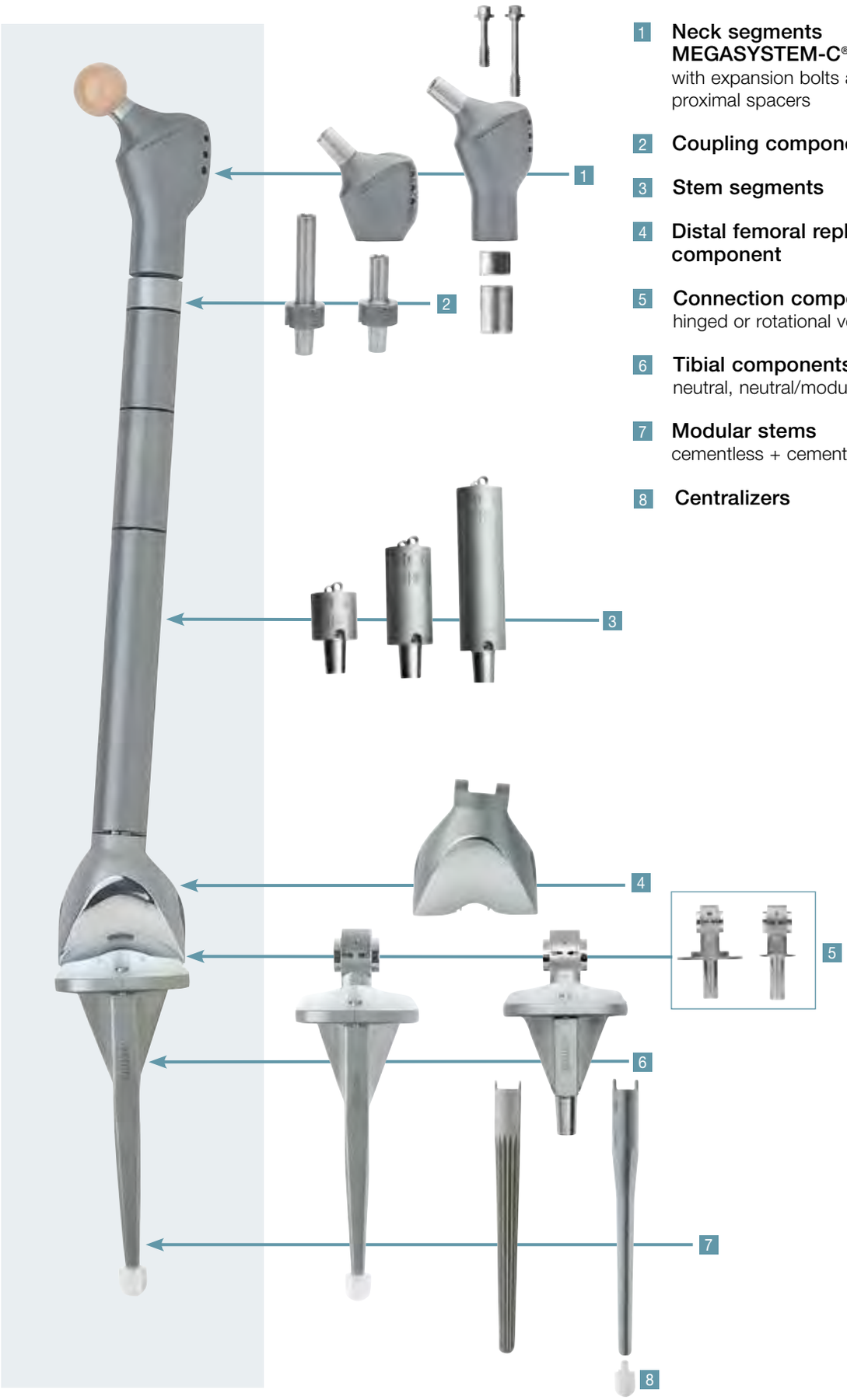

1 **Neck segments MEGASYSTEM-C®**
with expansion bolts and proximal spacers

2 **Coupling components**

3 **Stem segments**

4 **Distal femoral replacement component**

5 **Connection components:**
hinged or rotational version

6 **Tibial components:**
neutral, neutral/modular

7 **Modular stems**
cementless + cemented

8 **Centralizers**

Varity of Assembly 6

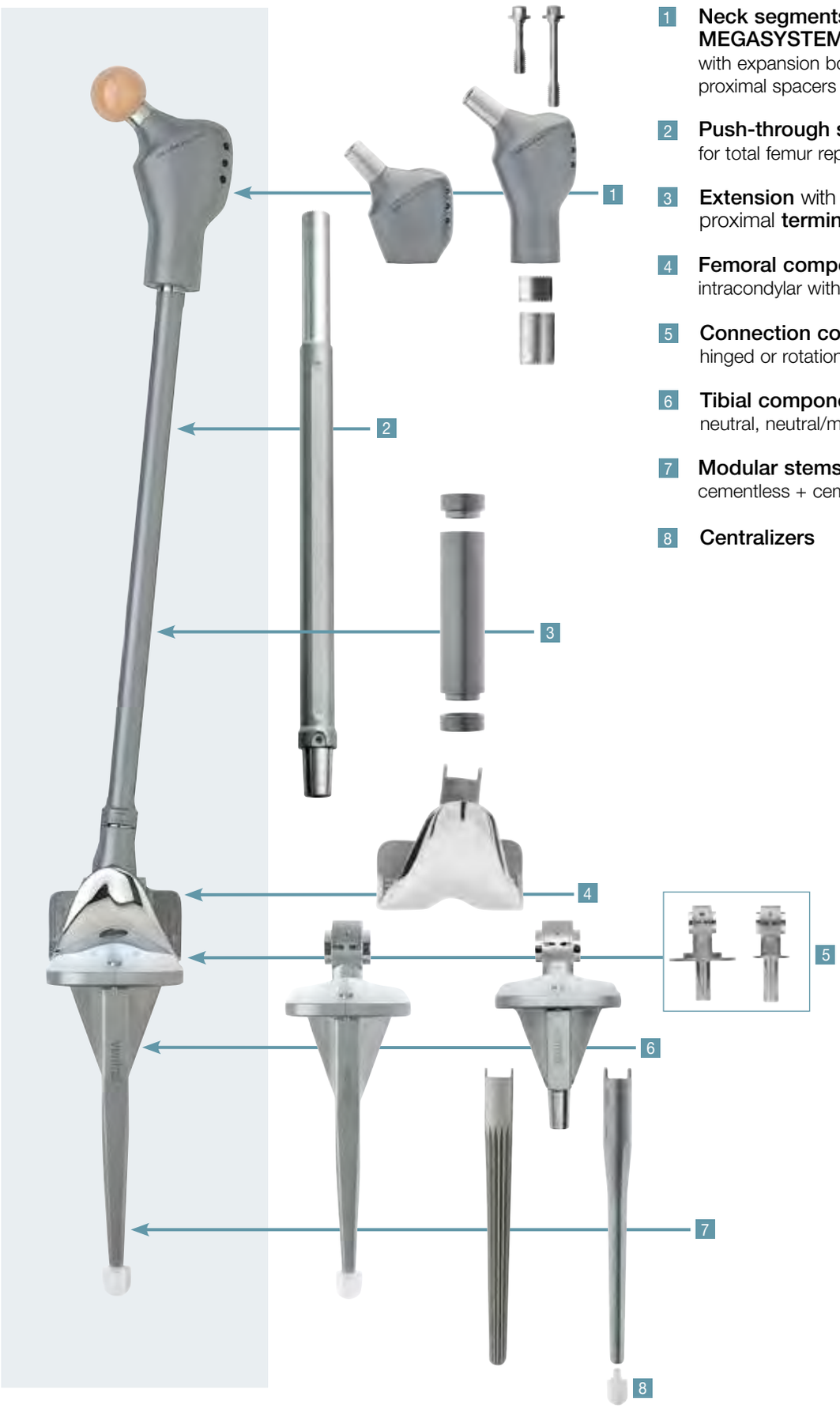

1 **Neck segments MEGASYSTEM-C®** with expansion bolts and proximal spacers

2 **Push-through stems** for total femur replacement

3 **Extension** with distal and proximal **terminals**

4 **Femoral components:** intracondylar with patella flange

5 **Connection components:** hinged or rotational version

6 **Tibial components:** neutral, neutral/modular

7 **Modular stems** cementless + cemented

8 **Centralizers**

Varity of Assembly 7

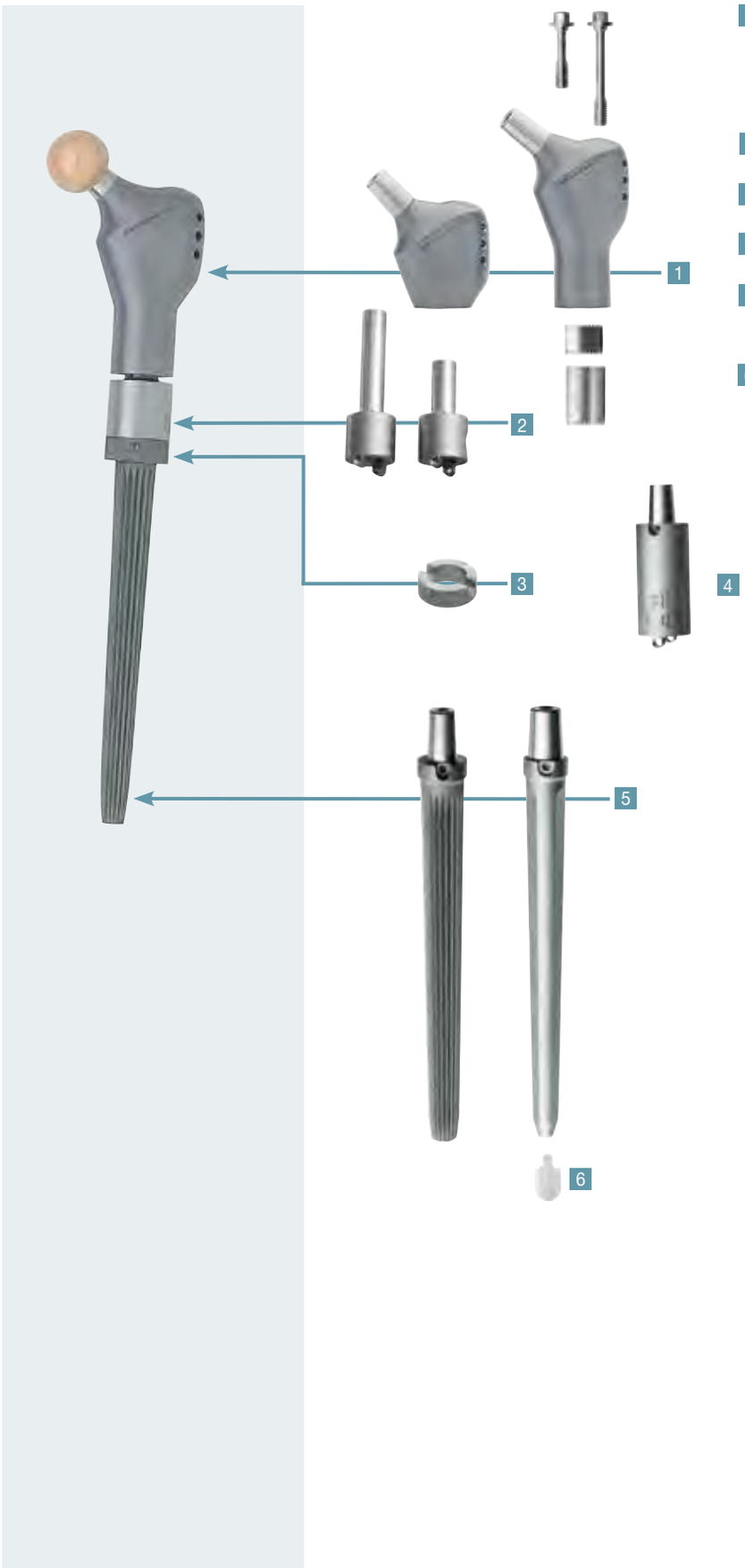

1 **Neck segments MEGASYSTEM-C®**
with expansion bolts and proximal spacers

2 **Coupling components**

3 **Support ring**

4 **Stem segments**

5 **Modular stems**
cementless + cemented

6 **Centralizers**

Varity of Assembly 8

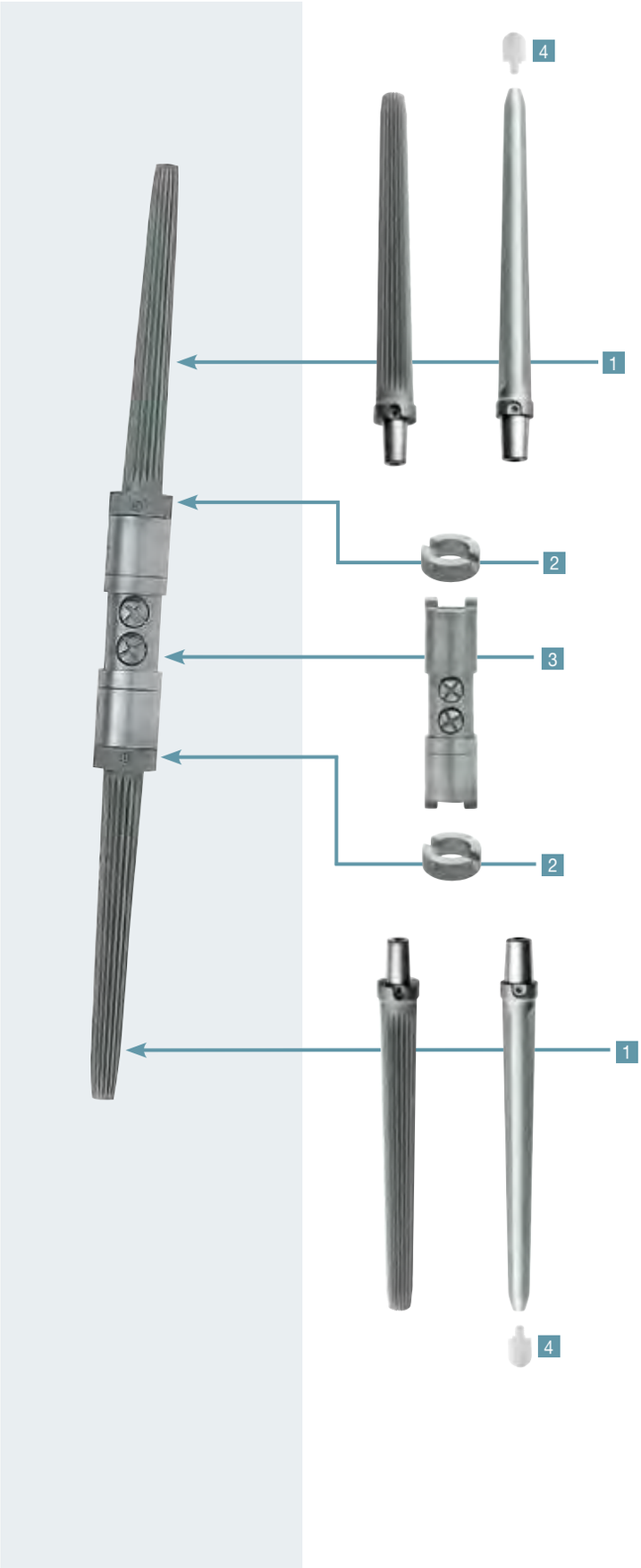

1 **Modular stems**
cementless + cemented

2 **Support ring**

3 **Coupling** for diaphyseal spacer

4 **Centralizers**

Neck Segments

Neck segments, massive, MEGASYSTEM-C®

	Material: Tilastan®	
Item no.	Length	CCD angle
15-8503/35	65 mm	135°
15-8503/26	65 mm	126°
15-8504/35	35 mm	135°
15-8504/26	35 mm	126°

Neck segments - without collar, microporous

	Material: Tilastan®	
Item no.	Length	CCD angle
172-964/35	65 mm	135°
172-964/26	65 mm	126°
172-965/35	35 mm	135°
172-965/26	35 mm	126°

Neck segments - with collar, microporous

	Material: Tilastan®	
Item no.	Length	CCD angle
172-960/35	65 mm	135°
172-960/26	65 mm	126°
172-961/35	35 mm	135°
172-961/26	35 mm	126°

Neck segments XXL - without collar,
40 mm offset, microporus

	Material: Tilastan®	
Item no.	Length	CCD angle
172-984/35	65 mm	135°
172-984/26	65 mm	126°
172-985/35	35 mm	135°
172-985/26	35 mm	126°

Neck segments XXL - with collar,
40 mm offset, microporous

	Material: Tilastan®	
Item no.	Length	CCD angle
172-980/35	65 mm	135°
172-980/26	65 mm	126°
172-981/35	35 mm	135°
172-981/26	35 mm	126°

Neck Segments

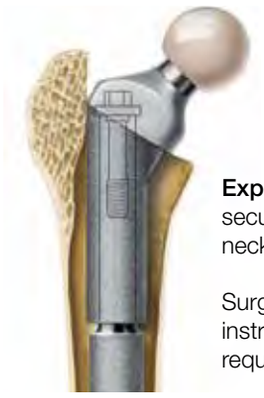

Expansion bolts serve to secure the fixation of the neck segments.

Surgical technique and instruments available on request.

Expansion bolts,
key width 8 mm

Item no.	Material: CoCrMo Length
172-947/38	41 mm
172-947/58	61 mm

Proximal spacers

Item no.	Material: CoCrMo Length	Ø
172-950/10	10 mm	14 mm
172-950/20	20 mm	14 mm

Warning:
to be used only with 65 mm neck segments.

Stem Components

Push-through stems for total femur replacement

	Material: CoCrMo, UHMWPE	
Item no.	Ø	Length
15-8523/70	14 mm	120 mm
15-8523/71	14 mm	160 mm
15-8523/72	14 mm	200 mm
15-8523/73	14 mm	240 mm
15-8523/74	14 mm	280 mm
15-8523/75	14 mm	320 mm
15-8523/76	14 mm	360 mm
15-8522/70	16 mm	120 mm
15-8522/71	16 mm	160 mm
15-8522/72	16 mm	200 mm
15-8522/73	16 mm	240 mm
15-8522/74	16 mm	280 mm
15-8522/75	16 mm	320 mm
15-8522/76	16 mm	360 mm

15-8522/65
Coupling for diaphyseal spacer,
Material: Tilastan®

Stem Components

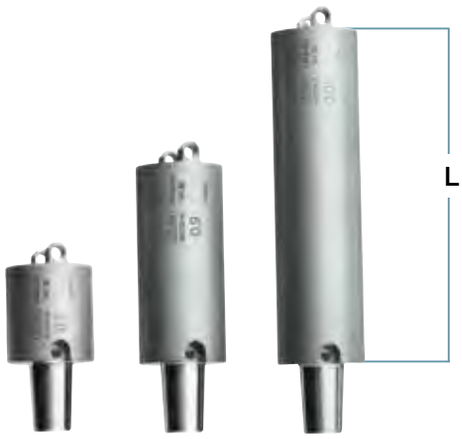

Stem segments, Ø 28 mm

Item no.	Material: Tilastan® Length (L)
15-8522/02	30 mm
15-8522/04	40 mm
15-8522/06	50 mm
15-8522/08	60 mm
15-8522/10	100 mm
15-8522/12	150 mm
15-8522/14	200 mm
15-8522/16	250 mm

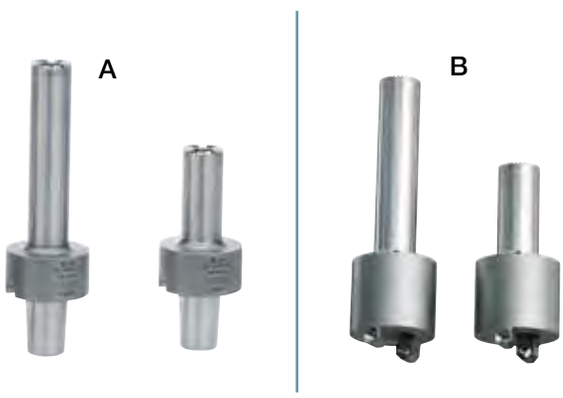

Coupling components for total femur (A) and proximal femur replacement (B)

Item no.	Material: CoCrMo
15-8522/24	for total femur replacement, short
15-8522/26	for total femur replacement, long
15-8522/28	for prox. femur replacement, short
15-8522/30	for prox. femur replacement, long

Support rings, height 10 mm

Item no.	Material: Tilastan® for stem-Ø
15-8502/66	up to Ø 18 mm

Stem Components

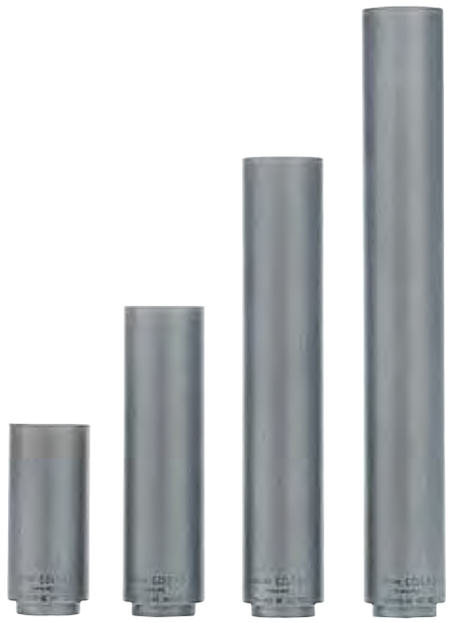

Extensions for push-through stems, Ø 28 mm

Item no.	Material: Tilastan® Length (L)
15-8502/90	30 mm
15-8502/91	40 mm
15-8502/92	50 mm
15-8502/93	60 mm
15-8502/94	100 mm
15-8502/95	150 mm
15-8502/96	200 mm
15-8502/97	250 mm

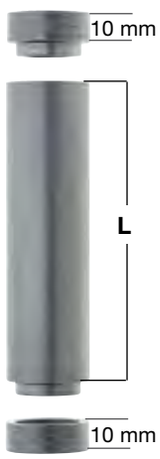

Terminals round for extensions, height 10 mm

Item no.	Material: Tilastan®
	Inner recess, distal:
15-8502/86	14 mm Inner-Ø, 28 mm Outer-Ø
15-8502/87	16 mm Inner-Ø, 28 mm Outer-Ø
	Outer recess, proximal:
15-8502/88	14 mm Inner-Ø, 28 mm Outer-Ø
15-8502/89	16 mm Inner-Ø, 28 mm Outer-Ø

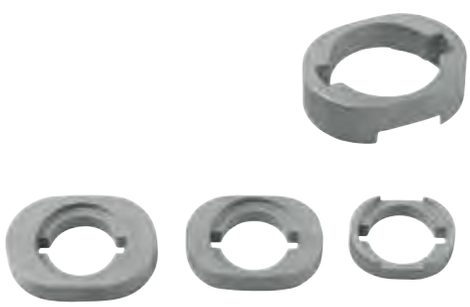

Terminals oval, height 10 mm

Item no.	Material: Tilastan®
	Dimensions:
15-8512/83	26 x 34 mm, 22 mm Inner-Ø
15-8512/84	30 x 44 mm, 22 mm Inner-Ø
15-8512/85	34 x 48 mm, 22 mm Inner-Ø

Joint Components Endo-Model® Rotational and Hinged Knee SL®

Femoral components, intracondylar, with patellar flange, modular

Item no.	Material: CoCrMo, UHMWPE		
16-2821/21	small	right	63 mm wide
16-2821/22	small	left	63 mm wide
16-2823/21	medium	right	69 mm wide
16-2823/22	medium	left	69 mm wide
16-2825/21	large	right	72,5 mm wide
16-2825/22	large	left	72,5 mm wide

Distal femoral replacement components, modular

Item no.	Material: CoCrMo, UHMWPE		
16-2853/21	small	right	60 mm wide
16-2853/22	small	left	60 mm wide
16-2855/21	medium	right	65 mm wide
16-2855/22	medium	left	65 mm wide
16-2857/21	large	right	75 mm wide
16-2857/22	large	left	75 mm wide

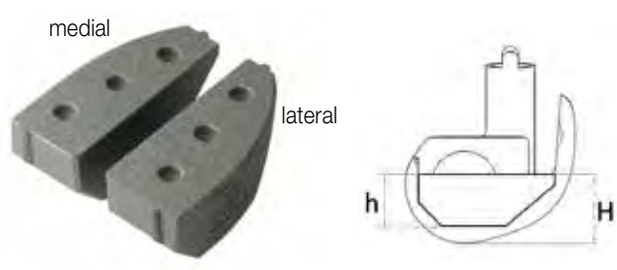

Femoral segments for femoral components, to replace distal condyles, height: **H** 25 mm

Item no.	Material: Tilastan®, cementless			h mm
15-8517/01	small	right	medial	18
15-8517/02	medium	right	medial	19
15-8517/03	large	right	medial	17
15-8517/11	small	right	lateral	18
15-8517/12	medium	right	lateral	19
15-8517/13	large	right	lateral	17
15-8518/01	small	left	medial	18
15-8518/02	medium	left	medial	19
15-8518/03	large	left	medial	17
15-8518/11	small	left	lateral	18
15-8518/12	medium	left	lateral	19
15-8518/13	large	left	lateral	17

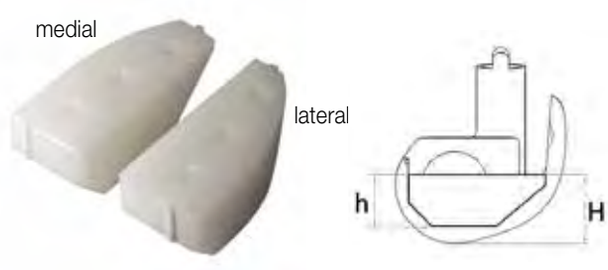

Femoral segments for femoral components, to replace distal condyles, height: **H** 25 mm

Item no.	Material: UHMWPE, cementable			h mm
15-8519/01	small	right	medial	18
15-8519/02	medium	right	medial	19
15-8519/03	large	right	medial	17
15-8519/11	small	right	lateral	18
15-8519/12	medium	right	lateral	19
15-8519/13	large	right	lateral	17
15-8520/01	small	left	medial	18
15-8520/02	medium	left	medial	19
15-8520/03	large	left	medial	17
15-8520/11	small	left	lateral	18
15-8520/12	medium	left	lateral	19
15-8520/13	large	left	lateral	17

Joint Components Endo-Model® Rotational and Hinged Knee SL®

Tibial components, neutral

Item no.	Material: CoCrMo, UHMWPE	
16-2817/02	small	60 mm wide
16-2817/05	medium	65 mm wide
16-2817/07	large	75 mm wide

Tibial components system SL®, modular, neutral

Item no.	Material: CoCrMo, UHMWPE	
16-2817/32	small	60 mm wide
16-2817/35	medium	65 mm wide
16-2817/37	large	75 mm wide

Proximal tibia replacement components, modular, neutral

Item no.	Material: Tilastan®, UHMWPE	
16-2849/22	small	60 mm wide
16-2849/25	medium	65 mm wide
16-2849/27	large	75 mm wide

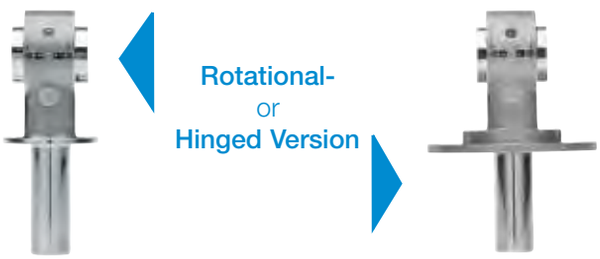

Connection components

Item no.	**Rotational version** Material: CoCrMo, UHMWPE		Item no.	**Hinged version** Material:CoCrMo, UHMWPE	
16-2840/02	small	neutral	16-2841/02	small	neutral
16-2840/05	medium	neutral	16-2841/05	medium	neutral
16-2840/07	large	neutral	16-2841/07	large	neutral

Modular Stems

Modular stems*

Cementless, Material: Tilastan®					
Item no.	Stem length L 100 mm	Item no.	Stem length L 130 mm	Item no.	Stem length L 160 mm
15-8524/50	Ø 12/9 mm	15-8523/50	Ø 12/8 mm	15-8522/50	Ø 12/7 mm
15-8524/51	Ø 13/10 mm	15-8523/51	Ø 13/9 mm	15-8522/51	Ø 13/8 mm
15-8524/52	Ø 14/11mm	15-8523/52	Ø 14/10 mm	15-8522/52	Ø 14/9 mm
15-8524/53	Ø 15/12mm	15-8523/53	Ø 15/11 mm	15-8522/53	Ø 15/10 mm
15-8524/54	Ø 16/13mm	15-8523/54	Ø 16/12 mm	15-8522/54	Ø 16/11 mm
15-8524/55	Ø 17/14mm	15-8523/55	Ø 17/13 mm	15-8522/55	Ø 17/12 mm
15-8524/56	Ø 18/15 mm	15-8523/56	Ø 18/14 mm	15-8522/56	Ø 18/13 mm
15-8524/57	Ø 19/16 mm	15-8523/57	Ø 19/15 mm	15-8522/57	Ø 19/14 mm
15-8524/58	Ø 20/17 mm	15-8523/58	Ø 20/16 mm	15-8522/58	Ø 20/15 mm
15-8524/59	Ø 21/18 mm	15-8523/59	Ø 21/17 mm	15-8522/59	Ø 21/16 mm
15-8524/60	Ø 22/19 mm	15-8523/60	Ø 22/18 mm	15-8522/60	Ø 22/17 mm
15-8524/61	Ø 23/20 mm	15-8523/61	Ø 23/19 mm	15-8522/61	Ø 23/18 mm
15-8524/62	Ø 24/21 mm	15-8523/62	Ø 24/20 mm	15-8522/62	Ø 24/19 mm

Modular stems*

Cemented, Material: CoCrMo					
Item no.	Stem length L 100 mm	Item no.	Stem length L 130 mm	Item no.	Stem length L 160 mm
15-8524/40	Ø 12/9 mm	15-8523/40	Ø 12/8 mm	15-8522/40	Ø 12/7mm
15-8524/42	Ø 14/11 mm	15-8523/42	Ø 14/10 mm	15-8522/42	Ø 14/9 mm
15-8524/44	Ø 16/13 mm	15-8523/44	Ø 16/12 mm	15-8522/44	Ø 16/11 mm

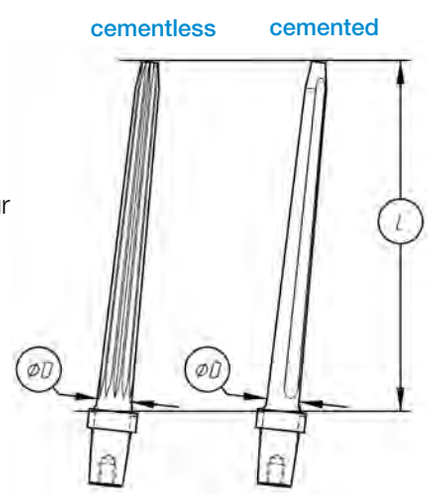

*** These modular stems can be combined with:**

- coupling device to assemble a proximal partial femur replacement
- femoral joint component, solid, or a stem segment attached to it to assemble a distal partial femur replacement
- coupling device for the diaphyseal spacer
- proximal tibial replacement

Modular Stems

Modular stems* with female taper (with 6 mm noses) for tibial components

Cementless, Material: Tilastan®					
Item no.	Stem length **L 100 mm**	Item no.	Stem length **L 130 mm**	Item no.	Stem length **L 160 mm**
15-8517/50	Ø 12/9 mm	15-8516/50	Ø 12/8 mm	15-8515/50	Ø 12/7 mm
15-8517/51	Ø 13/10 mm	15-8516/51	Ø 13/9 mm	15-8515/51	Ø 13/8 mm
15-8517/52	Ø 14/11 mm	15-8516/52	Ø 14/10 mm	15-8515/52	Ø 14/9 mm
15-8517/53	Ø 15/12 mm	15-8516/53	Ø 15/11 mm	15-8515/53	Ø 15/10 mm
15-8517/54	Ø 16/13 mm	15-8516/54	Ø 16/12 mm	15-8515/54	Ø 16/11 mm
15-8517/55	Ø 17/14 mm	15-8516/55	Ø 17/13 mm	15-8515/55	Ø 17/12 mm
15-8517/56	Ø 18/15 mm	15-8516/56	Ø 18/14 mm	15-8515/56	Ø 18/13 mm

Modular stems* with female taper (with 6 mm noses) for tibial components

Cemented, Material: CoCrMo					
Item no.	Stem length **L 100 mm**	Item no.	Stem length **L 130 mm**	Item no.	Stem length **L 160 mm**
15-8527/40	Ø 12/9 mm	15-8526/40	Ø 12/8 mm	15-8525/40	Ø 12/7 mm
15-8527/42	Ø 14/11 mm	15-8526/42	Ø 14/10 mm	15-8525/42	Ø 14/9 mm
15-8527/44	Ø 16/13 mm	15-8526/44	Ø 16/12 mm	15-8525/44	Ø 16/11 mm

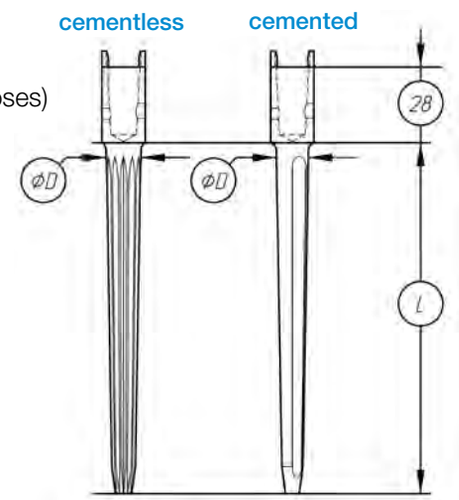

*** These modular stems can be combined with:**

- tibial components, neutral, modular (with 6 mm noses)

Ø 12 mm Ø 14 mm Ø 16 mm

Centering stars

Material: UHMWPE		
Item no.	Item no.	Size
Set:	consisting of:	
15-2975/01	15-2975/12 15-2975/14 15-2975/16	small medium large

Prosthesis Heads

For taper 12/14 mm

Prosthesis heads A - ceramic - BIOLOX®delta

Item no.	Material: BIOLOX®delta* Head-Ø	Neck length	
128-791/01	28 mm	short	- 3.5 mm
128-791/02	28 mm	medium	0 mm
128-791/03	28 mm	long	+ 3.5 mm
128-792/01	32 mm	short	- 4 mm
128-792/02	32 mm	medium	0 mm
128-792/03	32 mm	long	+ 4 mm
128-792/04	32 mm	extralong	+ 7 mm
128-793/01	36 mm	short	- 4 mm
128-793/02	36 mm	medium	0 mm
128-793/03	36 mm	long	+ 4 mm
128-793/04	36 mm	extra long	+ 8 mm

* BIOLOX®forte and BIOLOX®delta are products of CeramTec, Plochingen, Germany

Prothesis Heads - large

For taper 12/14 mm

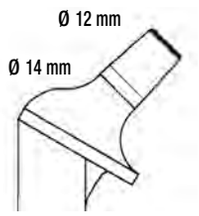

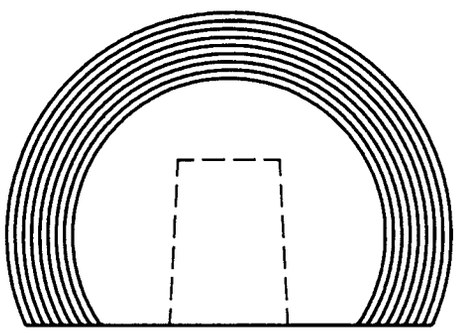

Head-Ø 38 – 54 mm

Prosthesis heads, large

Item no.	Material: CoCrMo Head-neck-length	Head-Ø
126-838	52 mm	38 mm
126-840	53 mm	40 mm
126-842	54 mm	42 mm
126-844	55 mm	44 mm
126-846	56 mm	46 mm
126-848	57 mm	48 mm
126-850	58 mm	50 mm
126-852	59 mm	52 mm
126-854	60 mm	54 mm

Vario-Cup Prosthesis

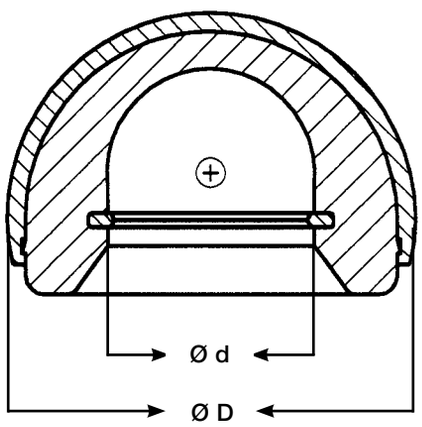

LINK® Vario-Cup prostheses, self-centering

Material: CrCoMo, UHMWPE			
Item no. **24.1 mm** Inner-Ø (d)	Item no. **28.1 mm** Inner-Ø (d)	Item no. **32.1 mm** Inner-Ø (d)	Outer-Ø (D)
107-210/39*# 107-210/40*#			Ø 39 mm Ø 40 mm
107-210/41* 107-210/42* 107-210/43*			Ø 41 mm Ø 42 mm Ø 43 mm
	107-220/44 107-220/45 107-220/46		Ø 44 mm Ø 45 mm Ø 46 mm
	107-220/47 107-220/48 107-220/49	 107-230/49	Ø 47 mm Ø 48 mm Ø 49 mm
	107-220/50 107-220/51 107-220/52	107-230/50 107-230/51 107-230/52	Ø 50 mm Ø 51 mm Ø 52 mm
	107-220/53 107-220/54 107-220/55	107-230/53 107-230/54 107-230/55	Ø 53 mm Ø 54 mm Ø 55 mm
	107-220/56 107-220/57 107-220/58	107-230/56 107-230/57 107-230/58	Ø 56 mm Ø 57 mm Ø 58 mm
	107-220/59 107-220/60 107-220/61	107-230/59 107-230/60 107-230/61	Ø 59 mm Ø 60 mm Ø 61 mm
	107-220/62 107-220/63 107-220/64	107-230/62 107-230/63 107-230/64	Ø 62 mm Ø 63 mm Ø 64 mm
	107-220/65	107-230/65	Ø 65 mm

* without safety ring
\# not self-centering

Accessories:
130-915/02 **X-ray templates,** 110% actual size, 4 sheets

Patella Components

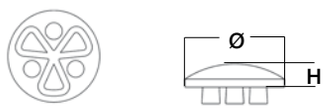

LINK® Patella components

Item no.	Size	Ø mm	Height mm
		Material: UHMWPE	
318-401/25	1	25	7
318-401/28	2	28	8
318-401/31	3	31	9
318-401/34	4	34	10

Instrument set for patella components available on request.

Surgical technique and instruments for patella resurfacing components
available on request

Instrument Sets MEGASYSTEM-C® – Overview

15-8700/01

Instrument Set MEGASYSTEM-C®, complete
in 16 sterilizing containers, on 17 trays

consisting of:

15-8710/01	Container **A**	Tapered Reamers 100 mm
consisting of: 05-2001/03 15-8711/01	**N11 standard container,** 575 x 275 x 100 mm **Tray,** empty, 550 x 265 x 50 mm Tray with detailed instruments see page 32	
15-8720/01	**Container B**	**Tapered Reamers 130 mm**
consisting of: 05-2001/03 15-8721/01	**N11 standard container,** 575 x 275 x 100 mm **Tray,** empty, 550 x 265 x 50 mm Tray with detailed instruments see page 33	
15-8730/01	**Container C**	**Tapered Reamers 160 mm**
consisting of: 05-2001/03 15-8731/01	**N11 standard container,** 575 x 275 x 100 mm **Tray,** empty, 550 x 265 x 50 mm Tray with detailed instruments see page 34	

15-8740/01	Container **D**	General Instruments I
consisting of: **05-2001/03** **15-8741/01**	**N11 standard container,** 575 x 275 x 100 mm **Tray,** empty, 550 x 265 x 50 mm Tray with detailed instruments see page 35	
15-8750/01	**Container E**	**General Instruments II**
consisting of: **05-2001/03** **15-8751/01**	**N11 standard container,** 575 x 275 x 100 mm **Tray,** empty, 550 x 265 x 50 mm Tray with detailed instruments see page 36	

15-8760/01	Container **F**	Femur I
consisting of: **05-2001/03** **15-8761/01**	**N11 standard container,** 575 x 275 x 100 mm **Tray,** empty, 550 x 265 x 50 mm Tray with detailed instruments see page 37	
15-8770/01	**Container G**	**Femur II**
bestehend aus: **05-2002/03** **15-8771/01**	**N21 standart container,** 575 x 275 x 130 mm **Tray,** empty, 550 x 265 x 50 mm Tray with detailed instruments see page 38	

Instrument Sets MEGASYSTEM-C® – Overview

15-8780/01	Container **H**	Tibia
consisting of: 05-2002/03 15-8781/01	**N21 standard container,** 575 x 275 x 130 mm **Tray,** empty, 550 x 265 x 50 mm Tray with detailed instruments see page 39	

15-8790/01	Container **I**	Trial Stems Femur, 100 + 130mm
consisting of: 05-2001/03 15-8791/01	**N11 standard container,** 575 x 275 x 100 mm **Tray,** empty, 550 x 265 x 50 mm Tray with detailed instruments see page 40	

15-8800/01	Container **J**	Trial Stems Femur, 160 mm
consisting of: 05-2001/03 15-8801/01	**N11 standard container** 575 x 275 x 100 mm **Tray,** empty, 550 x 265 x 50 mm Tray with detailed instruments see page 41	

15-8810/01	Container **K**	Tibial Trial Prostheses
consisting of: 05-2002/03 15-8811/01 15-8812/01	**N21 standard container,** 575 x 275 x 130 mm **Tray,** empty, 550 x 265 x 50 mm **Tray,** empty, 550 x 265 x 50 mm Tray with detailed instruments see pages 42 + 43	

15-8820/01	Container **L**	Trial Prostheses Proximal Femur
consisting of: 05-2001/03 15-8821/01	**N11 standard container,** 575 x 275 x 100 mm **Tray,** empty, 550 x 265 x 50 mm Tray with detailed instruments see page 44	

15-8830/01	Container **M**	Trial Prostheses Femur Diaphysis
consisting of: 05-2001/03 15-8831/01	**N11 standard container,** 575 x 275 x 100 mm **Tray,** empty, 550 x 265 x 50 mm Tray with detailed instruments see page 45	

15-8840/01	Container **N**	Trials Distal Femur
consisting of: 05-2001/03 15-8841/01	**N11 standard container,** 575 x 275 x 100 mm **Tray,** empty, 550 x 265 x 50 mm Tray with detailed instruments see page 46	

16-0100/00	Container **O**	Assembling Instrument Set
consisting of: 05-2002/03 16-0100/01	**N21 standard container,** 575 x 275 x 130 mm **Tray,** empty, 550 x 265 x 50 mm Tray with detailed instruments see page 47	

131-340/04	Container **P**	Complementary Instrument Set for Expansion Bolts
consisting of: 05-2001/03 131-341/10	**N11 standard container,** 575 x 275 x 100 mm **Tray,** empty, 550 x 265 x 50 mm Tray with detailed instruments see page 48	

15-8710/01 Container A – Tapered Reamers 100 mm

1	15-8711/01	**Tray,** empty, 550 x 265 x 50 mm	
		Tapered Reamers: for prosthesis stems 100 mm, conical, with fitting B: Hudson	
2	16-5100/12	for: stem-Ø 12 mm	stem length 100 mm
3	16-5100/13	for: stem-Ø 13 mm	stem length 100 mm
4	16-5100/14	for: stem-Ø 14 mm	stem length 100 mm
5	16-5100/15	for: stem-Ø 15 mm	stem length 100 mm
6	16-5100/16	for: stem-Ø 16 mm	stem length 100 mm
7	16-5100/17	for: stem-Ø 17 mm	stem length 100 mm
8	16-5100/18	for: stem-Ø 18 mm	stem length 100 mm
9	16-5100/19	for: stem-Ø 19 mm	stem length 100 mm
10	16-5100/20	for: stem-Ø 20 mm	stem length 100 mm
11	16-5100/21	for: stem-Ø 21 mm	stem length 100 mm
12	16-5100/22	for: stem-Ø 22 mm	stem length 100 mm
13	16-5100/23	for: stem-Ø 23 mm	stem length 100 mm
14	16-5100/24	for: stem-Ø 24 mm	stem length 100 mm

15-8720/01 Container B – Tapered Reamers 130 mm

1	15-8721/01	**Tray,** empty, 550 x 265 x 50 mm	
		Tapered Reamers: for prosthesis stems 130 mm, conical, with fitting B: Hudson	
2	16-5130/12	for: stem-Ø 12 mm	stem length 130 mm
3	16-5130/13	for: stem-Ø 13 mm	stem length 130 mm
4	16-5130/14	for: stem-Ø 14 mm	stem length 130 mm
5	16-5130/15	for: stem-Ø 15 mm	stem length 130 mm
6	16-5130/16	for: stem-Ø 16 mm	stem length 130 mm
7	16-5130/17	for: stem-Ø 17 mm	stem length 130 mm
8	16-5130/18	for: stem-Ø 18 mm	stem length 130 mm
9	16-5130/19	for: stem-Ø 19 mm	stem length 130 mm
10	16-5130/20	for: stem-Ø 20 mm	stem length 130 mm
11	16-5130/21	for: stem-Ø 21 mm	stem length 130 mm
12	16-5130/22	for: stem-Ø 22 mm	stem length 130 mm
13	16-5130/23	for: stem-Ø 23 mm	stem length 130 mm
14	16-5130/24	for: stem-Ø 24 mm	stem length 130 mm

15-8730/01 Container C – Tapered Reamers 160 mm

1	15-8731/01	**Tray,** empty, 550 x 265 x 50 mm	
		Tapered Reamers: for prosthesis stems 160 mm, conical, with fitting B: Hudson	
2	16-5160/12	for: stem-Ø 12 mm	stem length 160 mm
3	16-5160/13	for: stem-Ø 13 mm	stem length 160 mm
4	16-5160/14	for: stem-Ø 14 mm	stem length 160 mm
5	16-5160/15	for: stem-Ø 15 mm	stem length 160 mm
6	16-5160/16	for: stem-Ø 16 mm	stem length 160 mm
7	16-5160/17	for: stem-Ø 17 mm	stem length 160 mm
8	16-5160/18	for: stem-Ø 18 mm	stem length 160 mm
9	16-5160/19	for: stem-Ø 19 mm	stem length 160 mm
10	16-5160/20	for: stem-Ø 20 mm	stem length 160 mm
11	16-5160/21	for: stem-Ø 21 mm	stem length 160 mm
12	16-5160/22	for: stem-Ø 22 mm	stem length 160 mm
13	16-5160/23	for: stem-Ø 23 mm	stem length 160 mm
14	16-5160/24	for: stem-Ø 24 mm	stem length 160 mm

15-8740/01 Container D – General Instruments I

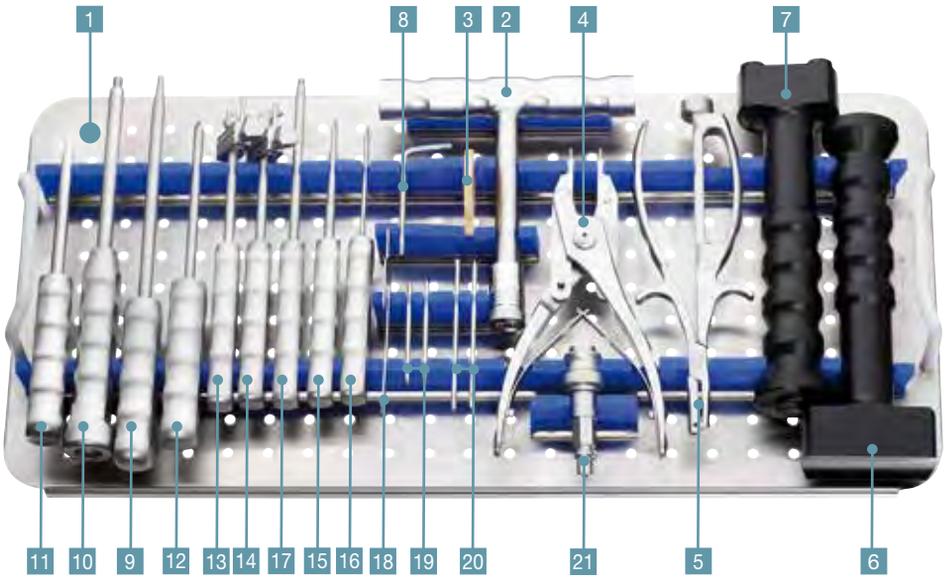

1	15-8741/01	**Tray,** empty, 550 x 265 x 50 mm
2	16-3210/00	**Handle,** short, with Hudson fitting and metal handle
3	16-3203/00	**Impaction plate** for tapered reamers
4	16-0020/01	**Connecting / Disconnecting forceps,** 175 mm
5	317-586	**Extraction forceps** for fixation pins, 210 mm
6	317-646/01	**Grooved driver** for femoral components, 210 mm
7	16-0018/02	**Grooved driver** für tibial components SL®
8	16-0116/01	**Hex screwdriver,** wrench size 2.5 mm
9	64-8008/02	**Hex screwdriver** with metal handle, wrench size 3.5 mm, 250 mm
10	15-8516/4	**Driver extractor,** with metal handle, for modular stems, 365 mm
11	322-145/01	**Screwdriver** with metal handle, blade width 8 mm, 210
12	317-658/01	**Bone awl,** with metal handle and trocar point, 215 mm
13	15-8035/02	**Insertion instrument** for PE plateaus Endo-Model® S, M and L, with metal handle
14	15-8035/03	**Insertion instrument** for PE plateaus Endo-Model® XS and Endo-Model® SL®
15	10-5373/01	**Hex screwdriver** with metal handle, wrench size 2.5 mm, 180 mm
16	64-1181/16	**Hex screwdriver** with metal handle, wrench size 2.0 mm, 175 mm
17	16-0017/01	**Separate rod M5** with metal handle, 220 mm
18	317-607/50	**Cutting template**
19	317-585/65	**Wire pins,** Ø 3 mm, 65 mm (4 ea. included)
20	317-585/95	**Wire pins,** Ø 3 mm, 95 mm (4 ea. included)
		Adapters optional with fittings:
21	16-3283/00	Hudson female/Jacobs male
22	16-3284/00	Hudson female/AO male
23	16-3285/00	Hudson female/Harris male

15-8750/01 Container E – General Instruments II

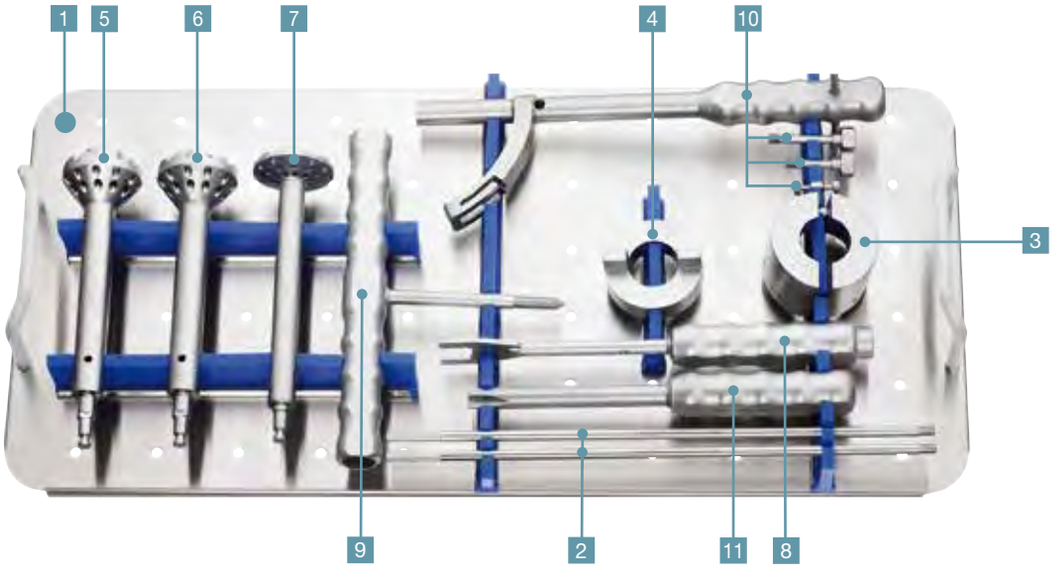

1	16-8751/01	**Tray,** empty, 550 x 265 x 50 mm
2	16-3235/00	**Guide rod** for saw guide for notching (2 ea. included)
3	16-3236/00	**Saw guide** for notching
4	16-3237/00	**Adapter ring** for saw guide for notching
5	16-3204/18	**Step reamer,** Ø 18 mm, with Hudson fitting
6	16-3204/24	**Step reamer,** Ø 24 mm, with Hudson fitting
7	16-3205/30	**Reamer,** Ø 30 mm, with Hudson fitting, 85 mm
8	15-8516/41	**Seperator** with metal handle, 235 mm
9	15-8506/52	**Distraction instrument** with metal handle
10	131-379/00	**Insertion instrument** with metal handle, for neck segments standard + XXL (4 parts)
11	16-3290/00	**Cross slot screwdriver** with metal handle, 210 mm

15-8760/01 Container F – Femur I

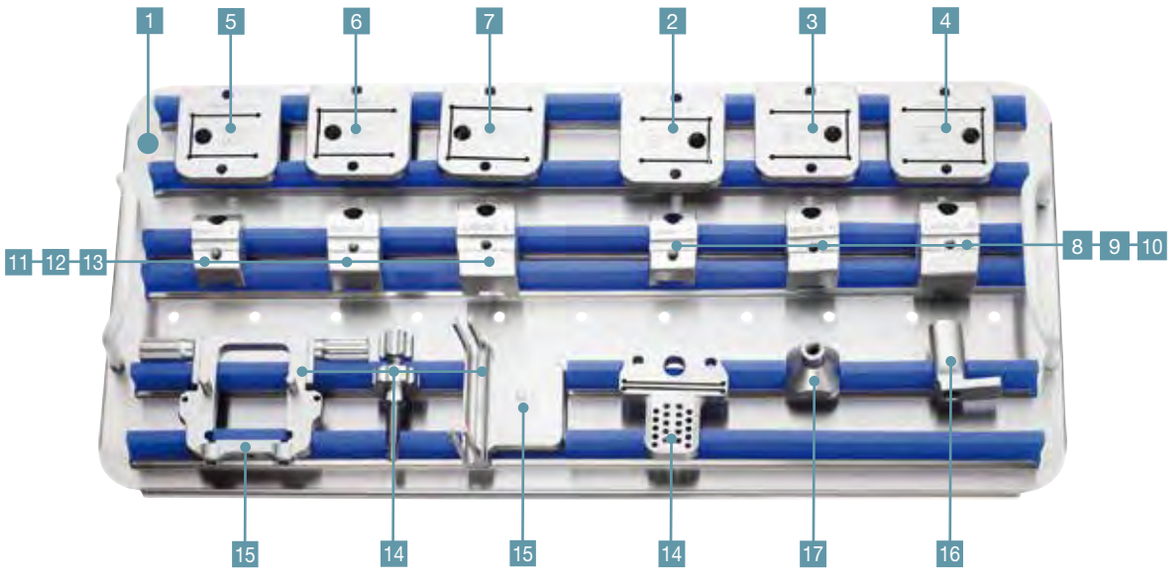

1	16-8761/01	**Tray,** empty, 550 x 265 x 50 mm	
		Saw attachments for femoral components SL®	
2	16-3221/01	small S	right
3	16-3223/01	medium M	right
4	16-3225/01	large L	right
5	16-3221/02	small S	left
6	16-3223/02	medium M	left
7	16-3225/02	large L	left
		Femoral trial box for femoral components SL®	
8	16-3261/01	small S	right
9	16-3263/01	medium M	right
10	16-3265/01	large L	right
11	16-3261/02	small S	left
12	16-3263/02	medium M	left
13	16-3265/02	large L	left
14	16-3277/00	**Revision cutting block,** distal, for femoral components SL® (2 parts)	
15	16-3278/00	**Revision alignment gauge,** distal, for femoral components SL® (2 parts)	
16	16-3282/00	**Aligment instrument** for femoral trial box	
17	16-3271/00	**Adapter** for femoral trial box	

15-8770/01 Container G – Femur II

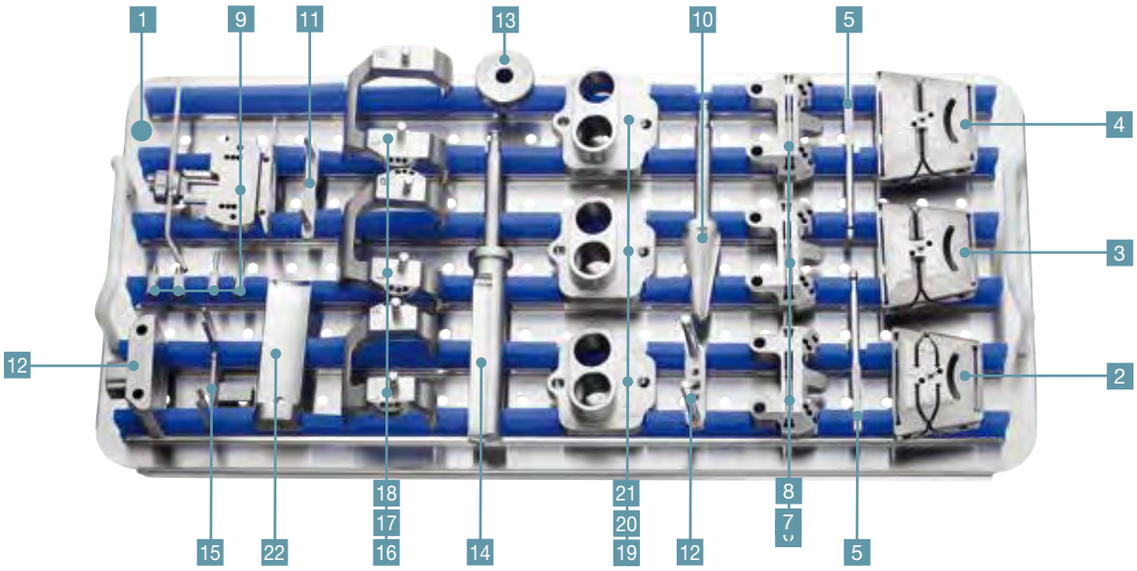

1	15-8771/01	**Tray,** empty, 550 x 265 x 50 mm	
		Femur cutting blocks for chamfer cuts	
2	16-3250/02	size 2	
3	16-3250/03	size 3	
4	16-3250/04	size 4	
5	317-802/58	**Alignment rods** for epicondyles, 100 mm (2 ea. included)	
		Femur cutting blocks for distal cut	
6	16-3228/02	size 2	
7	16-3228/03	size 3	
8	16-3228/04	size 4	
9	16-3276/00	**Alignment instrument,** for determination of external rotation (5 parts)	
10	16-3202/00	**Drill,** conical, to open femoral and tibial cavity, with Hudson fitting	
11	317-802/36	**Dove tail adapter,** neutral, for femoral cutting blocks	
12	16-3275/00	**Alignment instrument** for valgus angulation (2 parts)	
13	16-3281/00	**Center sleeve** for drill cap femur	
14	16-3206/20	**Drill** with stop, with Hudson fitting, Ø 20 mm	
15	16-3279/00	**Holding clamp**	
		Condyle caps femur	
16	16-3240/02	size 2	right/left
17	16-3240/03	size 3	right/left
18	16-3240/04	size 4	right/left
		Drill caps femur, Ø 20 mm	
19	16-3213/02	size 2	right/left
20	16-3213/03	size 3	right/left
21	16-3213/04	size 4	right/left
22	317-802/32	**Chisel** for patella glide, 80 mm	

15-8780/01 Container H – Tibia

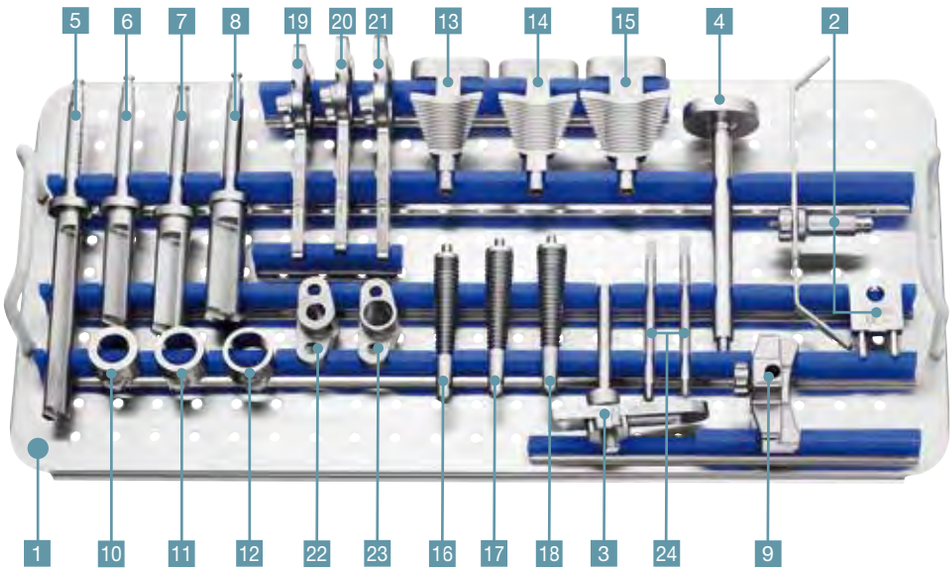

1	15-8781/01	**Tray,** empty, 550 x 265 x 50 mm
2	317-802/52	**Stylus** for tibial saw guide, adjustable (2 parts)
3	16-3212/08	**Connector,** size 8°, for tapered reamer/tibial saw guide
4	16-3197/00	**Handle,** for tibial compressor/femoral trial box
5	16-3207/16	**Drill** with stop, for tibial components SL®, ventral side, Ø 16 mm
		Drill with stop, for tibial components SL®
6	16-3208/18	small S Ø 18 mm
7	16-3208/20	medium M Ø 20 mm
8	16-3208/22	large L Ø 22 mm
9	16-3241/00	**Tibial saw guide** for tibial components SL®
		Drill guides for drill templates
10	16-3270/18	small S Ø 18 mm
11	16-3270/20	medium M Ø 20 mm
12	16-3270/22	large L Ø 22 mm
		Compressors for tibial components SL®
13	16-3199/02	small S
14	16-3199/03	medium M
15	16-3199/04	large L
		Stem compressors for tibial components SL®
16	16-3201/02	small S
17	16-3201/03	medium M
18	16-3201/04	large L
		Drill templates for tibial components SL®
19	16-3198/02	small S
20	16-3198/03	medium M
21	16-3198/04	large L
22	16-3266/00	**Alignment gauge,** tibia, for drill templates
23	16-3267/00	**Drill guide,** tibia, for ventral cut, Ø 16 mm
24	16-3211/00	**Guide rod,** tibia, for drill template (2 ea. included)

15-8790/01 Container I – Femur Trial Stems 100 mm + 130 mm

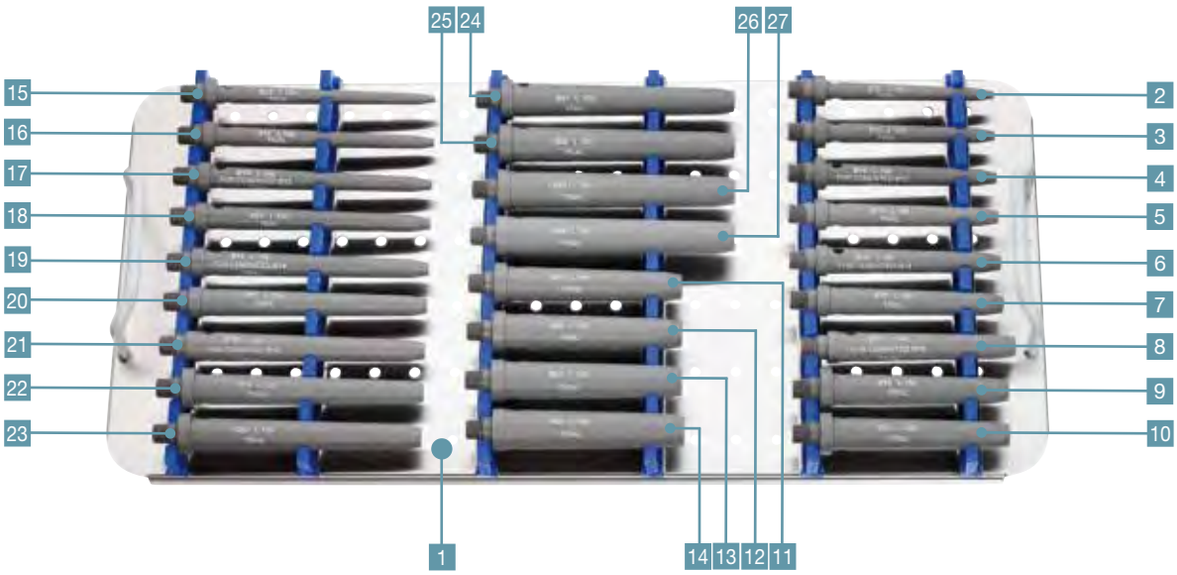

1	15-8791/01	**Tray,** empty, 550 x 265 x 50 mm	
		Tria stems for prosthesis stems 100 mm, conical	
2	16-3100/12	for: stem-Ø 12 mm	stem length 100 mm
3	16-3100/13	for: stem-Ø 13 mm	stem length 100 mm
4	16-3100/14	for: stem-Ø 14 mm	stem length 100 mm
5	16-3100/15	for: stem-Ø 15 mm	stem length 100 mm
6	16-3100/16	for: stem-Ø 16 mm	stem length 100 mm
7	16-3100/17	for: stem-Ø 17 mm	stem length 100 mm
8	16-3100/18	for: stem-Ø 18 mm	stem length 100 mm
9	16-3100/19	for: stem-Ø 19 mm	stem length 100 mm
10	16-3100/20	for: stem-Ø 20 mm	stem length 100 mm
11	16-3100/21	for: stem-Ø 21 mm	stem length 100 mm
12	16-3100/22	for: stem-Ø 22 mm	stem length 100 mm
13	16-3100/23	for: stem-Ø 23 mm	stem length 100 mm
14	16-3100/24	for: stem-Ø 24 mm	stem length 100 mm
		Trial stems for prosthesis stems 130 mm, concial	
15	16-3130/12	for stem-Ø 12 mm	stem length 130 mm
16	16-3130/13	for: stem-Ø 13 mm	stem length 130 mm
17	16-3130/14	for: stem-Ø 14 mm	stem length 130 mm
18	16-3130/15	for: stem-Ø 15 mm	stem length 130 mm
19	16-3130/16	for: stem-Ø 16 mm	stem length 130 mm
20	16-3130/17	for: stem-Ø 17 mm	stem length 130 mm
21	16-3130/18	for: stem-Ø 18 mm	stem length 130 mm
22	16-3130/19	for: stem-Ø 19 mm	stem length 130 mm
23	16-3130/20	for: stem-Ø 20 mm	stem length 130 mm
24	16-3130/21	for: stem-Ø 21 mm	stem length 130 mm
25	16-3130/22	for: stem-Ø 22 mm	stem length 130 mm
26	16-3130/23	for: stem-Ø 23 mm	stem length 130 mm
27	16-3130/24	for: stem-Ø 24 mm	stem length 130 mm

15-8800/01 Container J – Femur Trial Stems 160 mm

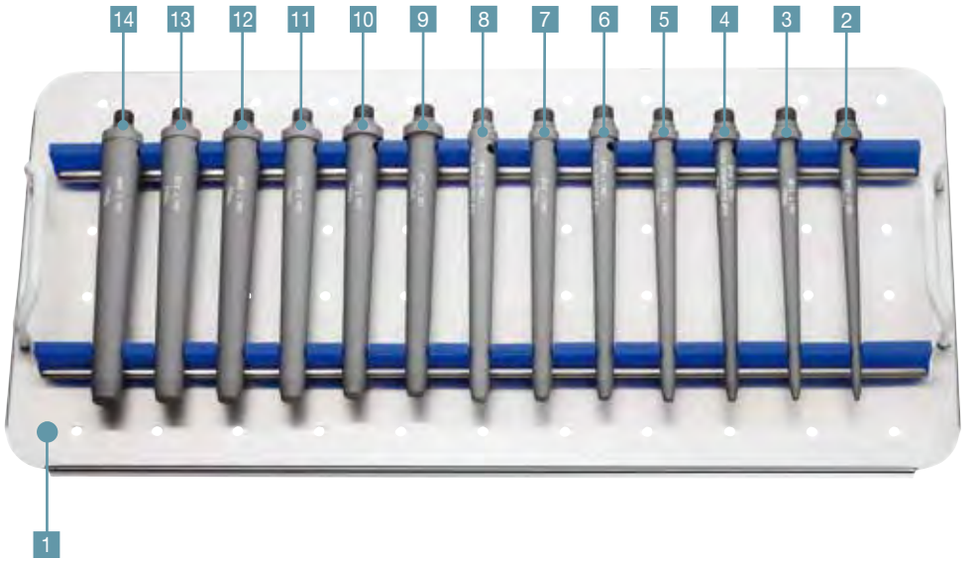

1	15-8801/01	**Tray,** empty, 550 x 265 x 50 mm	
		Trial stems for prosthesis stems 160 mm, conical	
2	16-3160/12	for: stem-Ø 12 mm	stem length 160 mm
3	16-3160/13	for: stem-Ø 13 mm	stem length 160 mm
4	16-3160/14	for: stem-Ø 14 mm	stem length 160 mm
5	16-3160/15	for: stem-Ø 15 mm	stem length 160 mm
6	16-3160/16	for: stem-Ø 16 mm	stem length 160 mm
7	16-3160/17	for: stem-Ø 17 mm	stem length 160 mm
8	16-3160/18	for: stem-Ø 18 mm	stem length 160 mm
9	16-3160/19	for: stem-Ø 19 mm	stem length 160 mm
10	16-3160/20	for: stem-Ø 20 mm	stem length 160 mm
11	16-3160/21	for: stem-Ø 21 mm	stem length 160 mm
12	16-3160/22	for: stem-Ø 22 mm	stem length 160 mm
13	16-3160/23	for: stem-Ø 23 mm	stem length 160 mm
14	16-3160/24	for: stem-Ø 24 mm	stem length 160 mm

15-8810/01 Container K – Tibial Trial Prostheses Tray I

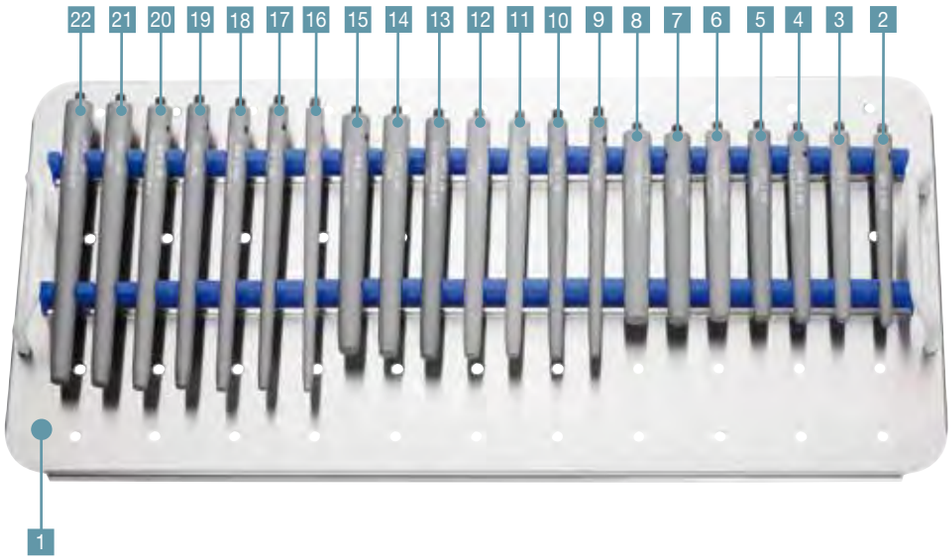

1	15-8811/01	**Tray,** empty, 550 x 265 x 50 mm	
		Trial stems for modular tibia: 100 mm, 130 mm + 160 mm**,** conical	
2	16-4100/12	for: stem-Ø 12 mm	for modular tibia 100 mm
3	16-4100/13	for: stem-Ø 13 mm	for modular tibia 100 mm
4	16-4100/14	for: stem-Ø 14 mm	for modular tibia 100 mm
5	16-4100/15	for: stem-Ø 15 mm	for modular tibia 100 mm
6	16-4100/16	for: stem-Ø 16 mm	for modular tibia 100 mm
7	16-4100/17	for: stem-Ø 17 mm	for modular tibia 100 mm
8	16-4100/18	for: stem-Ø 18 mm	for modular tibia 100 mm
9	16-4130/12	for: stem-Ø 12 mm	for modular tibia 130 mm
10	16-4130/13	for: stem-Ø 13 mm	for modular tibia 130 mm
11	16-4130/14	for: stem-Ø 14 mm	for modular tibia 130 mm
12	16-4130/15	for: stem-Ø 15 mm	for modular tibia 130 mm
13	16-4130/16	for: stem-Ø 16 mm	for modular tibia 130 mm
14	16-4130/17	for: stem-Ø 17 mm	for modular tibia 130 mm
15	16-4130/18	for: stem-Ø 18 mm	for modular tibia 130 mm
16	16-4160/12	for: stem-Ø 12 mm	for modular tibia 160 mm
17	16-4160/13	for: stem-Ø 13 mm	for modular tibia 160 mm
18	16-4160/14	for: stem-Ø 14 mm	for modular tibia 160 mm
19	16-4160/15	for: stem-Ø 15 mm	for modular tibia 160 mm
20	16-4160/16	for: stem-Ø 16 mm	for modular tibia 130 mm
21	16-4160/17	for: stem-Ø 17 mm	for modular tibia 130 mm
22	16-4160/18	for: stem-Ø 18 mm	for modular tibia 130 mm

15-8810/01 Container K – Tibial Trial Prostheses Tray II

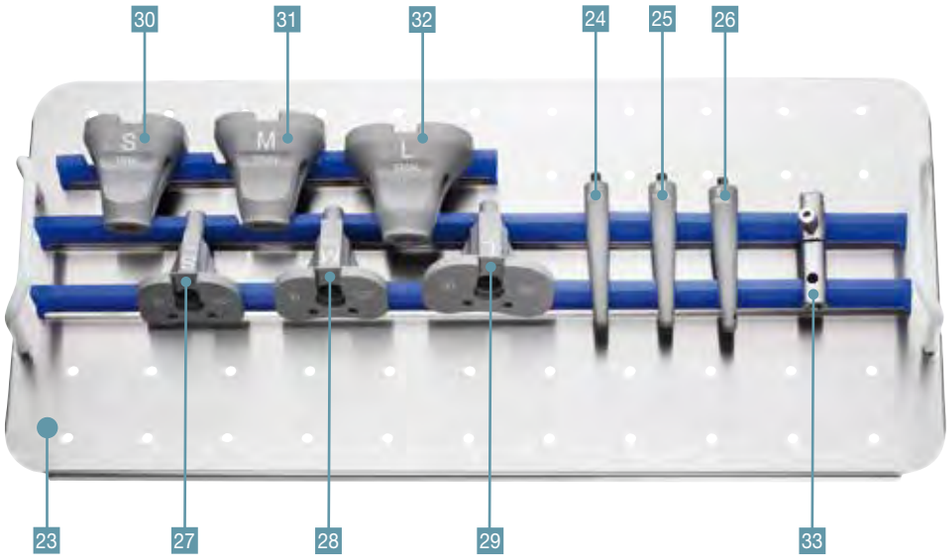

23	15-8812/01	**Tray,** empty, 550 x 265 x 50 mm
		Trial stems, conical, for tibia with fixed stem
24	16-3170/02	small S
25	16-3170/03	medium M
26	16-3170/04	large L
		Trial prostheses, tibia, neutral
27	16-3175/02	small S
28	16-3175/03	medium M
29	16-3175/04	large L
		Trial prostheses, for proximal tibia replacement, neutral
30	16-3180/02	small S
31	16-3180/03	medium M
32	16-3180/04	large L
33	16-3196/00	**Trial prosthesis** for connection components

15-8820/01 Container L – Trial Prostheses Proximal Femur

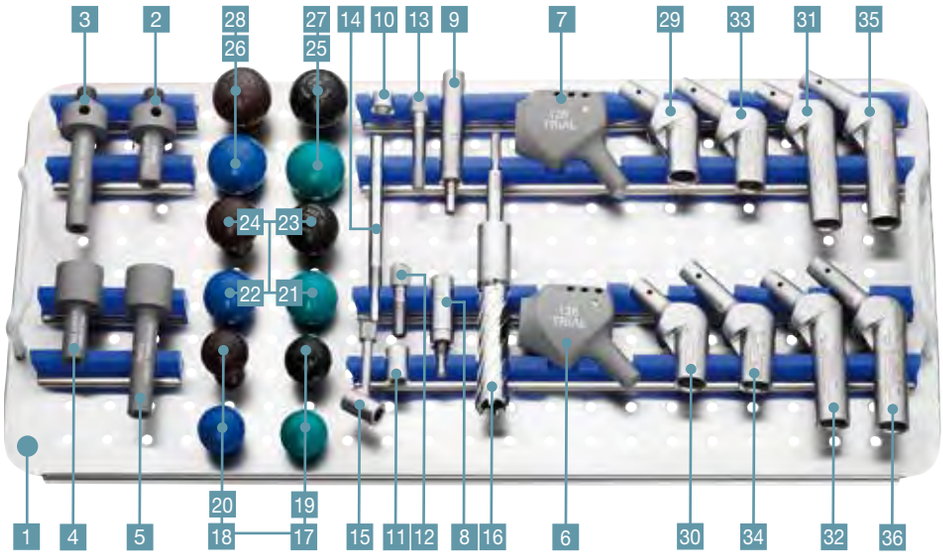

1	15-8821/01	**Tray,** empty, 550 x 265 x 50 mm	
2	16-3202/24	**Trial prosthesis coupling component** for total femur replacement, short	
3	16-3202/26	**Trial prosthesis coupling component** for total femur replacement, long	
4	16-3202/28	**Trial prosthesis coupling component** for proximal femur replacement, short	
5	16-3202/30	**Trial prosthesis coupling component** for proximal femur replacement, long	
6	16-3203/35	**Trial neck segment** for proximal femur replacement, 35 mm, 12/14 mm taper, 135° CCD	
7	16-3203/26	**Trial neck segment** for proximal femur replacement, 35 mm, 12/14 mm taper, 126° CCD	
8	131-383	**Drill guide** with stop, for proximal femur replacement, 60 mm	
9	131-383/90	**Drill guide** with stop, for proximal femur replacement, 90 mm	
10	131-398/10	**Trial proximal spacer,** 10 mm	
11	131-398/20	**Trial proximal spacer,** 20 mm	
12	131-397/38	**Trial fixation screw,** 38 mm	
13	131-397/58	**Trial fixation screw,** 58 mm	
14	131-377/01	**Guide rod** for positioning neck segment, 120 mm	
15	131-376	**Go/no go guide,** 60 mm	
16	131-384/01	**Tubular reamer** with external chip disposal, with fitting Jacobs Chuck, 175 mm	
		Plastic trial heads, colored, 12/14 mm taper, **Ø 28 mm**	
17	131-928/01	short	green
18	131-928/02	medium	blue
19	131-928/03	long	black
20	131-928/04	extra long	brown
		Plastic trial heads, colored, 12/14 mm taper, **Ø 32 mm**	
21	131-932/01	short	green
22	131-932/02	medium	blue
23	131-932/03	long	black
24	131-932/04	extra long	brown
		Plastic trial heads, colored, 12/14 mm taper, **Ø 36 mm**	
25	131-936/01	short	green
26	131-936/02	medium	blue
27	131-936/03	long	black
28	131-936/04	extra long	brown
		Trial neck segments, 12/14 mm taper	
29	131-395/26	35 mm	126° CCD
30	131-395/35	35 mm	135° CCD
31	131-396/26	65 mm	126° CCD
32	131-396/35	65 mm	135° CCD
		Trail neck segments XXL with 40 mm offset, 12/14 mm taper	
33	131-393/26	35 mm	126° CCD
34	131-393/35	35 mm	135° CCD
35	131-394/26	65 mm	126° CCD
36	131-394/35	65 mm	135° CCD

15-8830/01 Container **M** – Trial Prostheses Femur Diaphysis

1	15-8831/01	**Tray,** empty, 550 x 265 x 50 mm
		Trial prostheses
2	16-4120/00	for: push-through stem 120 mm
3	16-4160/00	for: push-through stem 160 mm
4	16-4200/00	for: push-through stem 200 mm
5	16-4240/00	for: push-through stem 240 mm
6	16-4280/00	for: push-through stem 280 mm
7	16-4320/00	for: push-through stem 320 mm
8	16-4360/00	for: push-through stem 360 mm
		Trial prostheses
9	16-3030/00	for: stem segment 30 mm
10	16-3040/00	for: stem segment 40 mm
11	16-3050/00	for: stem segment 50 mm
12	16-3060/00	for: stem segment 60 mm
13	16-3100/00	for: stem segment 100 mm
14	16-3150/00	for: stem segment 150 mm
15	16-3200/00	for: stem segment 200 mm
16	16-3250/00	for: stem segment 250 mm
17	16-3204/00	**Trial prosthesis** for coupling for diaphyseal spacer, 103 mm

15-8840/01 Container N – Trials Distal Femur

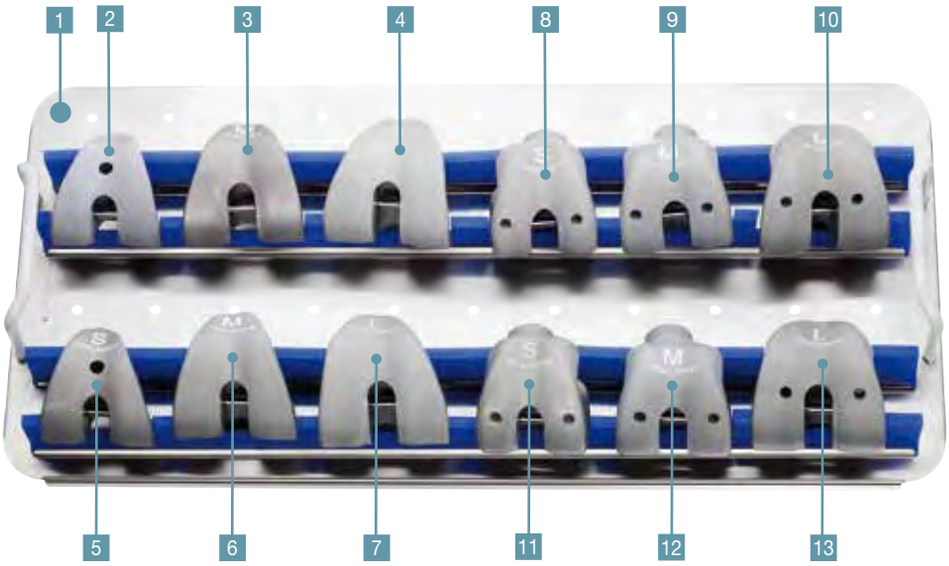

1	15-8841/01	**Tray,** empty, 550 x 265 x 50 mm	
		Trial prostheses, femur, intracondylar	
2	16-3181/02	small S	left
3	16-3183/02	medium M	left
4	16-3185/02	large L	left
5	16-3181/01	small S	right
6	16-3183/01	medium M	right
7	16-3185/01	large L	right
		Trial prostheses, femur, for distal femur replacement	
8	16-3191/02	small S	left
9	16-3193/02	medium M	left
10	16-3195/02	large L	left
11	16-3191/01	small S	right
12	16-3193/01	medium M	right
13	16-3195/01	large L	right

16-0100/00 Container O – Assembling Instrument Set

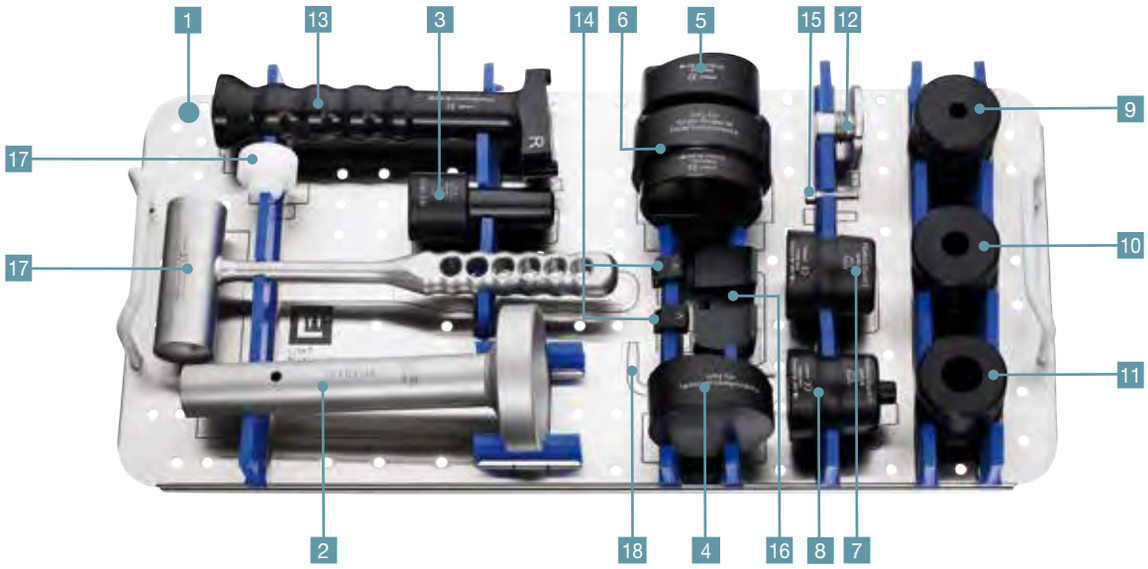

1	16-0100/01	**Tray,** empty, 550 x 265 x 50 mm
2	16-0118/01	**Assembling table: upper part**
3	16-0118/03	**Assembling table: silencer**
4	16-0110/01	**Femur assembling plate**
5	16-0110/02	**Tibia assembling plate** for Endo-Model® SL® knee prosthesis
6	16-0110/03	**Tibia assembling plate** for Endo-Model® knee prosthesis
7	16-0111/01	**Assembling protector** for female taper
8	16-0111/02	**Assembling protector** for male taper
		Assembling protectors
9	16-0112/01	Size 1
10	16-0112/02	Size 2
11	16-0112/03	Size 3
12	16-0113/01	**Metal core** for assembling protector, for modular stem (size 1-3)
13	16-0114/01	**Handle** for femur assembling protector
14	16-0114/02	**Block,** spare part for femur assembling protector 16-0114/01 (2 ea. included)
15	16-0114/04	**Screw** for assembling protectors femur
16	16-0114/04	**Plate,** spare part for femur assembling protector 16-0114/01
17	16-0115/01	**Mallet,** non-resilient, 800g, complete
18	16-0116/02	**Hex screwdriver,** hex 5 mm

131-340/04 Container P – Complementary Instrument Set for Expansion Bolts

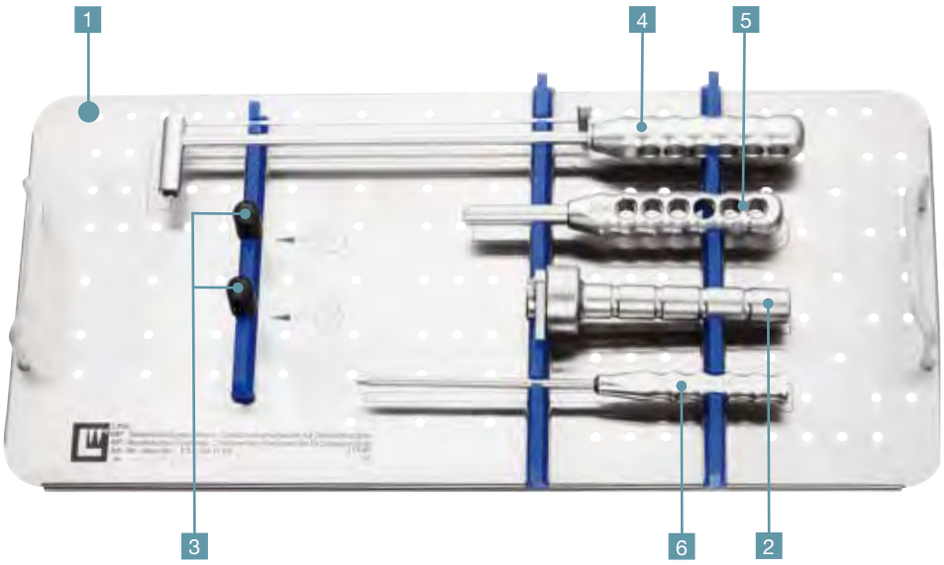

1	131-341/10	**Tray,** empty, 550 x 265 x 50 mm
2	131-378/10	**Holder** for MP® neck segments, 150 mm
3	131-378/11	**Plastic sleevers** for 131-378/10, taper 12/14 mm (2 ea. included)
4	131-385/10	**Torque wrench,** key width 8 mm, 380 mm
5	131-385/01	**Screwdriver,** key width 8 mm, 185 mm
6	131-378/20	**Hex wrench,** key width 5 mm, 244 mm

Surface Modifications*

a) Modular cementless stems PoroLink®* optional with HX®*(calciumphosphat) coating

* PoroLink®: grid blasted titanium surface Ra ~7µm
* HX®: CaP = calcium phosphate coating

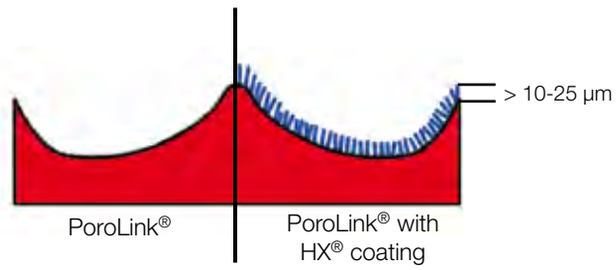

b) Bone replacement components CoCrMo optional with PorEx®*

* PorEx®: TiNbN = Titanium Niobium Nitride

Catalog 914 availabale on request

c) Bone replacement components (no intramedullary stems) wih PorAg®*

* PorAg®: antimicrobial surface modification,
TiAgN/Ag = titanium silver nitride/silver surface modification

* Custom-made prosthesis available on request

Extendible Components*

a) Extension mechanism integrated in stem segment

- **max. extension length 30 mm**

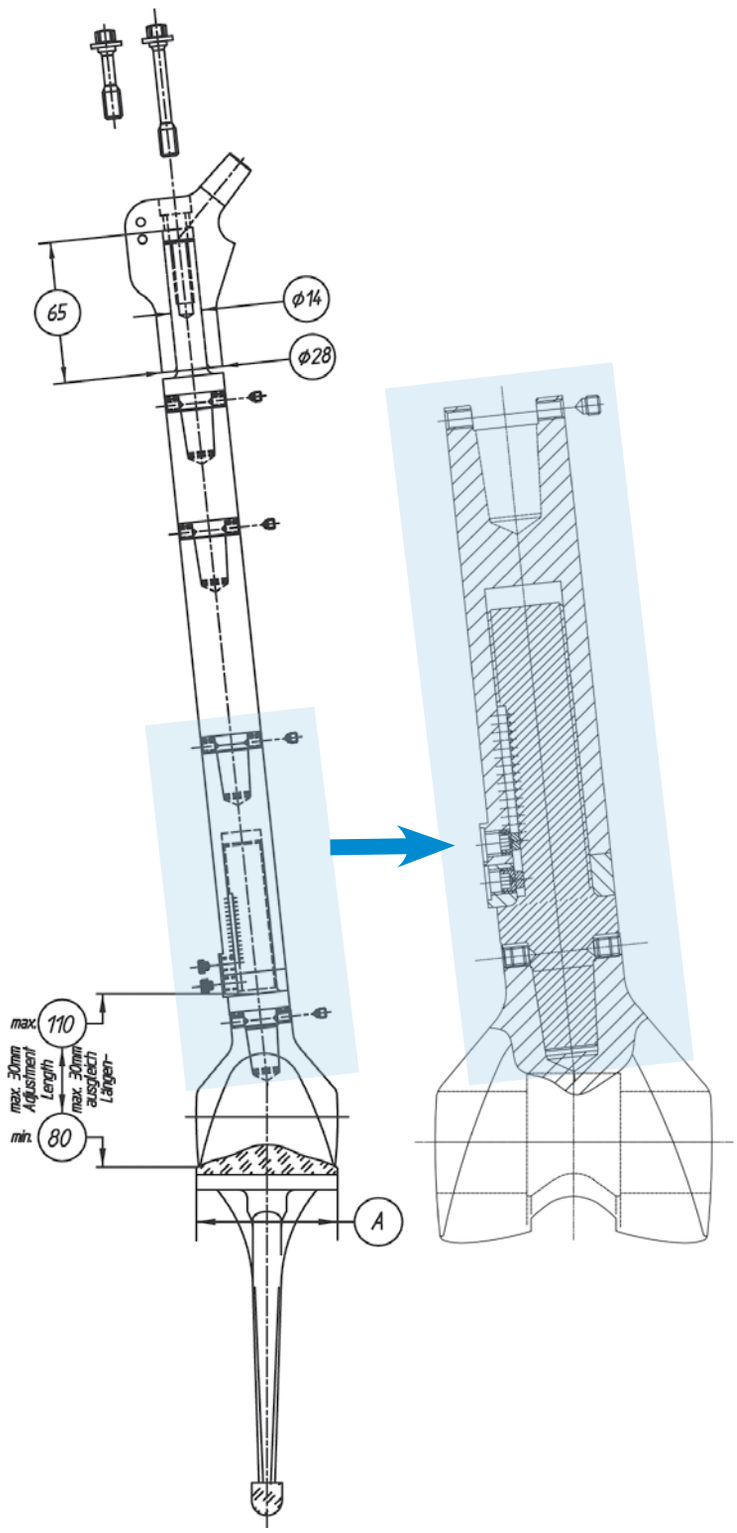

Information:
For application in patients with primary risk of luxation or in period of growth.

* Custom-made prosthesis available on request

Extendible Components*

a) Extension mechanism integrated in distal femoral replacement component

- **max. extension length 26 mm**

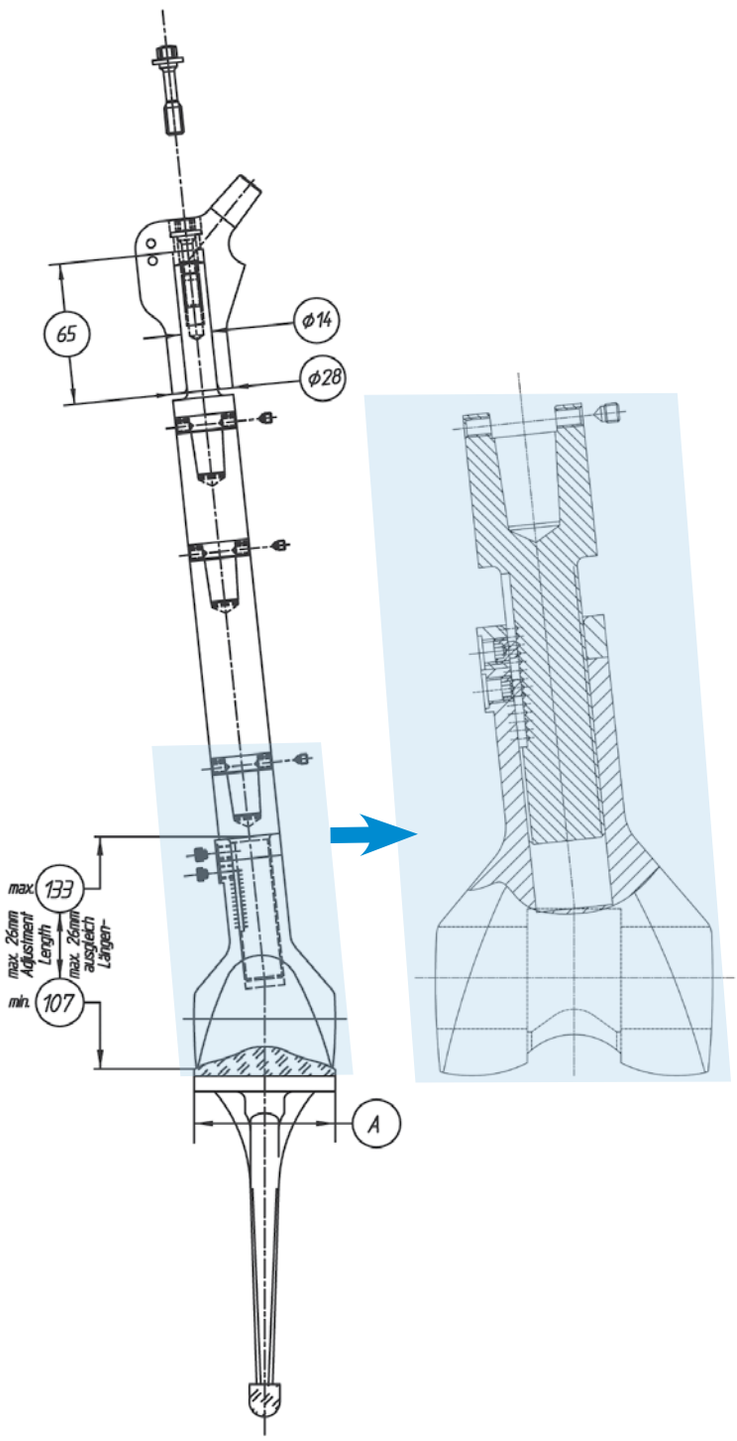

Information:
For application in patients with primary risk of luxation or in period of growth.

* Custom-made prosthesis available on request

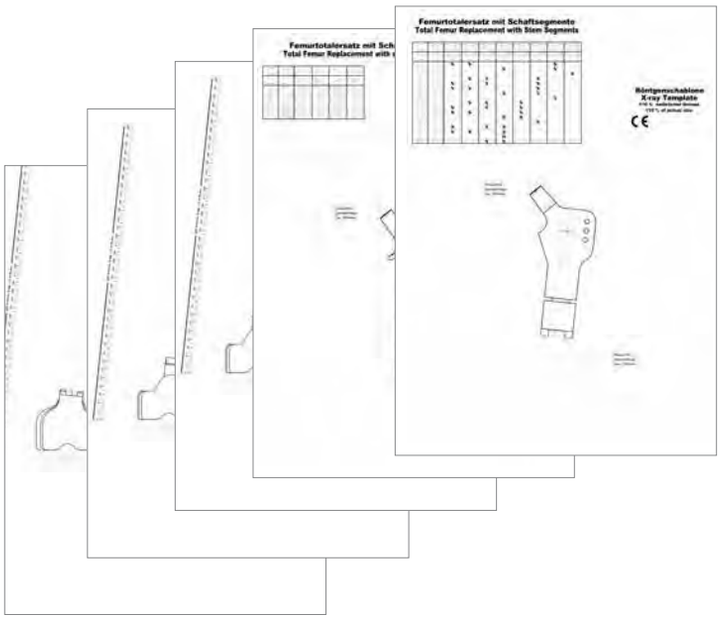

X-ray templates,
110% of actual size, set = 5 sheets

Item no.	
15-8516/61	for LINK® MEGASYSTEM-C® with SL® knee components

Guide rod with slaphammer (without picture)
(optional for stem extraction:
guide rod 317-661 in combination with
driver extractor 15-8516/45)

Item no.	Length
317-661	365 mm

MEGASYSTEM-C®
Tumor and Revision System
- Surgical Technique

available on request.

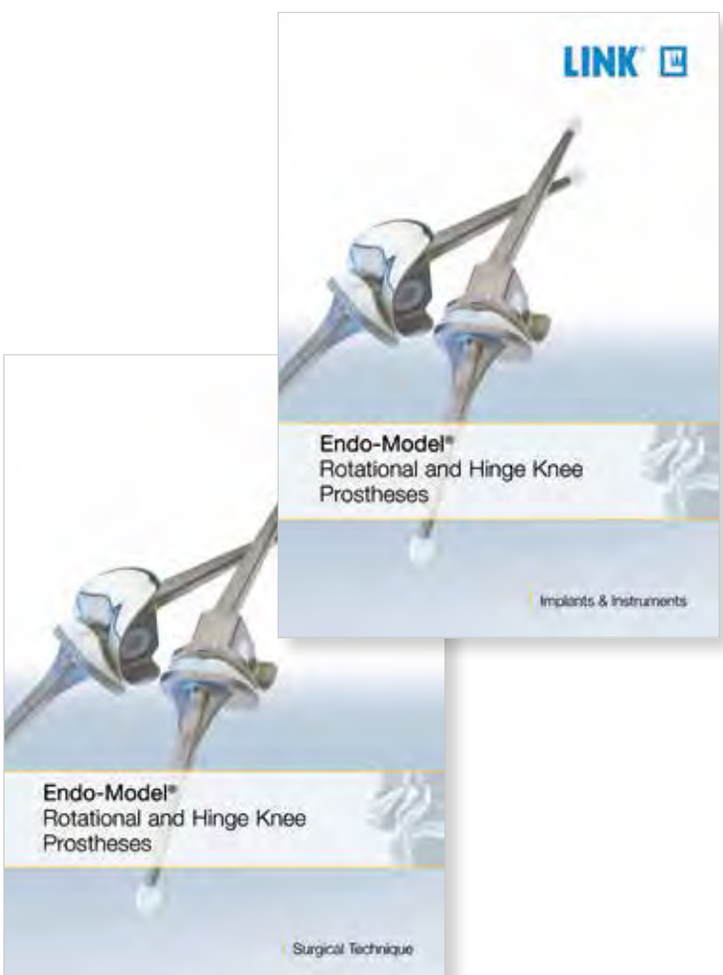

Endo-Model®
Rotational and Hinged Knee System SL®
- Surgical Technique,
- Implantats and Instruments

available on request.

Numerical Index

Numerical Index

Numerical Index

Please note the following regarding the use of our implants:

1. **Choosing the right implant is very important.**
   The size and shape of the human bone determine the size and shape of the implant and also limit the load capacity. Implants are not designed to withstand unlimited physical stress. Demands should not exceed normal functional loads.

2. **Correct handling of the implant is very important.**
   Under no circumstances should the shape of a finished implant be altered, as this shortens its life span. Our implants must not be combined with implants from other manufacturers.

   The instruments indicated in the Surgical Technique must be used to ensure safe implantation of the components.

3. **Implants must not be reused.**
   Implants are supplied sterile and are intended for single use only. Used implants must not be reused.

4. **After-treatment is also very important.**
   The patient must be informed of the limitations of the implant. The load capacity of an implant cannot compare with that of healthy bone!

5. **Unless otherwise indicated, implants are supplied in sterile packaging.**
   Note the following conditions for storage of packaged implants:
   - Avoid extreme or sudden changes in temperature.
   - Sterile implants in their original, intact protective packaging may be stored in permanent buildings up until the "Use by" date indicated on the packaging.
   - They must not be exposed to frost, dampness or direct sunlight, or mechanical damage.
   - Implants may be stored in their original packaging for up to 5 years after the date of manufacture. The "Use by" date is indicated on the product label.
   - Do not use an implant if the packaging is damaged.

6. **Traceability is important.**
   Please use the documentation stickers provided to ensure traceability.

7. **Further information** on the material composition is available on request from the manufacturer.

Follow the instructions for use!

Waldemar Link GmbH & Co. KG, Hamburg

The Surgical Technique described has been written to the best of our knowledge and belief, but it does not relieve the surgeon of his/her responsibility to duly consider the particularities of each individual case.

Unless otherwise indicated, all instruments are made of surgical stainless steel.

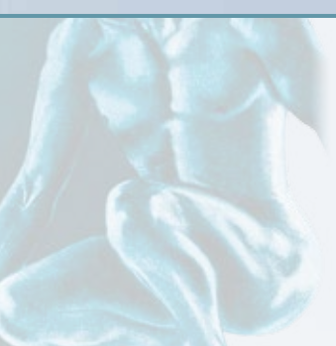

Waldemar Link GmbH & Co. KG

Barkhausenweg 10 · 22339 Hamburg, Germany
P.O. Box 63 05 52 · 22315 Hamburg, Germany
Tel.: +49 40 53995-0 · Fax: +49 40 5386929
E-mail: info@linkhh.de · www.linkorthopaedics.com